PRE ARRIVAL READINESS EVALUATION PARE 3.0

PEACE BRIDGE CANADIAN PLAZA IMPROVEMENTS

FOR

THE BUFFALO AND FORT ERIE PUBLIC BRIDGE AUTHORITY

MARCH 2024

ISSUED FOR BID TENDER SET

CROSSING PATHS BUILDING FUTURES

THE PEACE BRIDGE

TITLE PAGE

PREPARED BY:

WSP USA Inc.
40 La Riviere Drive
Suite 320
Buffalo, NY 14202
(716) 853-1220

IT IS A VIOLATION OF THE LAW FOR ANY PERSON, UNLESS ACTING UNDER THE DIRECT SUPERVISION OF A LICENSED ARCHITECT OR ENGINEER, TO ALTER AN ITEM IN ANY WAY. IF AN ITEM BEARING THE SEAL OF AN ARCHITECT OR ENGINEER IS ALTERED, THE ALTERING ARCHITECT OR ENGINEER SHALL AFFIX TO THEIR ITEM THE SEAL AND THE NOTATION "ALTERED BY" FOLLOWED BY THEIR SIGNATURE AND THE DATE OF SUCH ALTERATION AND A SPECIFIC DESCRIPTION OF THE ALTERATION.

MARK	DESCRIPTION	DATE	APPR.
A	ISSUED FOR BID (NOT FOR CONST.)	03/21/2024	

DESIGNED BY: M. VELICEVIC
DATE: 03/21/2024
DWN BY: B.M.
CKD BY: M.V.
SOLICITATION NO.:
SUBMITTED BY: WSP CANADA
CONTRACT NO.:
FILE NAME: pw://wsp-cs-prod-pw.bentley.com:pw-cs-eu-prod-centralus-1:d0000000-0000-0000-0000-000000000000/Documents/PARE 3.0 - Peace Bridge Canadian Plaza Improvements/Drawings/G-01.dwg
PLOTTED BY: B.M.
PLOT DATE: 03/21/2024
SIZE: 22" X 34"

BUFFALO AND FORT ERIE PUBLIC BRIDGE AUTHORITY

WSP USA Inc.
40 La Riviere Drive
Suite 320
Buffalo, NY 14202
(716) 853-1220

BUFFALO AND FORT ERIE PUBLIC BRIDGE AUTHORITY
PROJECT# PARE 3.0
TITLE PAGE

CROSSING PATHS BUILDING FUTURES THE PEACE BRIDGE

DRAWING NUMBER
G-1

C:\pw_wrk\wsp-ca18\dms09581\20M-00635-00-G01.dwg Wed, 20 Mar 2024 - 3:33pm DeanG

DISCIPLINE	DWG NO.	DRAWING TITLE/DESCRIPTION	SHEET NO.
GENERAL	G-1	TITLE PAGE	1
	G-2	INDEX OF DRAWINGS	2
	G-3	GENERAL NOTES, ABBREVIATIONS AND LEGEND	3
CIVIL	S-1	STAGING SITE PLAN STAGE 1	4
	S-2	STAGING SITE PLAN STAGE 1	5
	S-3	STAGING SITE PLAN STAGE 2	6
	R-1	REMOVALS	7
	R-2	REMOVALS	8
	N-1	NEW CONSTRUCTION	9
	N-2	NEW CONSTRUCTION	10
	N-3	NEW CONSTRUCTION PAVEMENTS STRUCTURES	11
	N-4	NEW CONSTRUCTION PAVEMENTS STRUCTURES	12
	N-5	PAVEMENT ELEVATIONS	13
	P-1	SEWER PROFILES	14
	T-1	REMOVAL DETAILS	15
	T-2	TYPICAL DETAILS	16
	T-3	TYPICAL DETAILS	17
	T-4	TYPICAL DETAILS	18
	B-1	BOREHOLE PLAN	19
	B-2	BOREHOLE DATA	20
	M-1	PAVEMENT MARKINGS	21
	M-2	PAVEMENT MARKINGS	22
STRUCTURAL	SG001	STRUCTURAL NOTES 1/3	23
	SG002	STRUCTURAL NOTES 2/3	24
	SG003	STRUCTURAL NOTES 3/3	25
	SG004	TYPICAL DETAILS 1/4	26
	SG005	TYPICAL DETAILS 2/4	27
	SG006	TYPICAL DETAILS 3/4	28
	SG007	TYPICAL DETAILS 4/4	29
	SG101	KEY PLAN	30
	SG102	ELEVATIONS	31
	SS101	SALT BARN FOUNDATION & FLOOR PLAN	32
	SS102	SALT BARN FRAMING PLAN	33
	SS301	SALT BARN SECTIONS	34
	SS501	SALT BARN FOUNDATION DETAILS	35
	ST101	TRUCK CANOPY FOUNDATION PLAN 1/2	36
	ST102	TRUCK CANOPY FOUNDATION PLAN 2/2	37
	ST103	TRUCK CANOPY SLAB AND EQUIPMENT PLAN	38
	ST104	TRUCK CANOPY ROOF PLAN	39
	ST301	TRUCK CANOPY SECTIONS	40
	ST302	TRUCK LANE SECTIONS	41
	ST303	VAULT INFILL SECTIONS 1/2	42
	ST304	VAULT INFILL SECTIONS 2/2	43
	ST501	TRUCK CANOPY CONCRETE DETAILS	44
	ST502	TRUCK CANOPY FRAMING DETAILS	45
	ST503	TRUCK CANOPY ROOFING AND FASCIA DETAILS	46
	ST504	TRUCK CANOPY MISC. DETAILS	47
	ST601	TRUCK CANOPY COLUMN SCHEDULE	48
	ST901	TRUCK CANOPY FRAMING ISOMETRICS VIEW	49

DISCIPLINE	DWG NO.	DRAWING TITLE/DESCRIPTION	SHEET NO.
ELECTRICAL	E-1	SITE PLAN LAYOUT - PART 1	50
	E-2	SITE PLAN LAYOUT - PART 1	51
	E-3	SITE PLAN LAYOUT - PART 3	52
	E-4	SITE PLAN LAYOUT - PART 4	53
	E-5	SITE WIRING LAYOUT - PART 1	54
	E-6	SITE WIRING LAYOUT - PART 2	55
	E-7	SITE WIRING LAYOUT - PART 3	56
	E-8	SINGLE LINE DIAGRAMS	57
	E-9	PANEL BOARD SCHEDULES	58
	E-10	ELECTRICAL DETAILS - 1	59
	E-11	ELECTRICAL DETAILS - 2	60
	E-12	ELECTRICAL DETAILS - 3	61
	E-13	ELECTRICAL DETAILS - 4	62
	E-14	ELECTRICAL DETAILS - 5	63
	E-15	ELECTRICAL DETAILS - 6	64
	E-16	WEST ABUTMENT ELECTRICAL ROOM LAYOUT	65
	E-17	OUTBUILDING LAYOUT	66
	E-18	SALT BARN ELECTRICAL LAYOUT	67
COMMUNICATION	C-1	SITE COMM. SCHEMATIC	68
	C-2	PHYSICAL DETAILS	69
	C-3	CENTRAL & DUTY FREE VMS WIRING DIAGRAM	70
	C-4	DUTY FREE VMS COMMUNICATIONS	71
	C-5	CENTRAL VMS PHYSICAL DETAILS	72
	C-6	CENTRAL AVE. VMS COMMUNICATIONS	73
	C-7	APPROACH CANOPY PHYSICAL DETAILS	74
	C-8	APPROACH CANOPY WIRING DIAGRAM	75
	C-9	APPROACH CANOPY COMMUNICATIONS	76
	C-10	COMMUNICATION DETAIL - 1	77
EQUIPMENT SD/GG	CL-001	MEP SYSTEM OVERALL LAYOUT	78
	CD-001	MEP WALL LAYOUT	79
	CD-002	MEP WALLS ELEVATION	80
	CD-003	MEP WALL SECTIONS	81
	CD-004	MEP PLAN VIEW	82
	CD-005	CONDUIT AND CONDUCTOR DETAILS	83
	CD-006	CONDUIT STUB-UP DIMENSIONAL PLAN	84
	CD-007	CHAIN LINK FENCE DETAILS	85
	CD-008	CHECK IN KIOSK INSTALLATION DETAIL	86
	CD-011	OVER HEIGHT GANTRY INSTALLATION DETAILS	87
	EI800.1	SINGLE LINE DIAGRAM	88

IT IS A VIOLATION OF THE LAW FOR ANY PERSON, UNLESS ACTING UNDER THE DIRECT SUPERVISION OF A LICENSED ARCHITECT OR ENGINEER, TO ALTER ANYTHING ON THIS DRAWING. IF AN ARCHITECT OR ENGINEER ACTING UNDER HIS DIRECTION AND SUPERVISION ALTERING ARCHITECT OR ENGINEER SHALL AFFIX TO THEIR ITEM THEIRS AND THEIR COMPANY NAME IS ADDED TO THE DRAWING, THEIRS SIGNATURE AND THE DATE OF SUCH ALTERATION AND A SPECIFIC DESCRIPTION OF THE ALTERATION.

MARK	DESCRIPTION	DATE	APPR

DISCLAIMER

DESIGNED BY: Designer | DATE: 07/27/2024
DWN BY: Author | CKD BY: Checker | SOLICITATION NO.:
SUBMITTED BY: | CONTRACT NO.: 187928
FILE NAME: BIM 360://BUF-UQ-30000-01 - Peace Bridge GEC - R22/PARE 3.0 - Structural R21.1.rvt
SIZE: 22" X 34" | PLOTTED BY: | PLOT DATE: 08/01/2024

BUFFALO AND FORT ERIE PUBLIC BRIDGE AUTHORITY
xx

WSP USA Inc.
1 Wall Street Drive
Suite 3A
Clarkston, NY 14433
(716) 783-1120

BUFFALO AND FORT ERIE PUBLIC
BRIDGE AUTHORITY
PROJECT# XXX PARE 3.0

INDEX OF DRAWINGS

CROSSING PATHS BUILDING FUTURES
THE PEACE BRIDGE

DRAWING NUMBER

G-2

GENERAL NOTES

1. THE OWNER OF THE WORK FOR THIS CONTRACT IS THE BUFFALO AND FORT ERIE PUBLIC BRIDGE AUTHORITY. HEREAFTER REFERRED TO AS THE AUTHORITY.

2. RECORD PLANS FOR THIS FACILITY ARE AVAILABLE BY REQUEST AT THE AUTHORITY'S MAIN OFFICE LOCATED AT 100 QUEEN ST., FORT ERIE, ON L2A 3S6.

3. ALL WORK SHALL BE PERFORMED IN ACCORDANCE WITH THE CONTRACT DOCUMENTS AND SPECIFICATIONS UNLESS DIRECTED OTHERWISE BY THE ENGINEER.

4. WHEN PROPOSED WORK SHOWN IN THE PLANS DIFFERS FROM THE STANDARD SHEETS AND STANDARD SPECIFICATIONS, THE INFORMATION AS DETAILED ON THE PLANS SHALL GOVERN.

5. THE CONTRACTOR'S ATTENTION IS DIRECTED TO THE FACT THAT, DUE TO THE NATURE OF RECONSTRUCTION PROJECTS, THE EXACT EXTENT OF RECONSTRUCTION WORK CANNOT ALWAYS BE ACCURATELY DETERMINED PRIOR TO THE COMMENCEMENT OF WORK. THESE CONTRACT DOCUMENTS HAVE BEEN PREPARED BASED ON FIELD INSPECTION AND OTHER INFORMATION AVAILABLE AT THE TIME. ACTUAL FIELD CONDITIONS MAY REQUIRE MODIFICATIONS TO CONSTRUCTION DETAILS AND WORK QUANTITIES. THE CONTRACTOR SHALL PERFORM THE WORK IN ACCORDANCE WITH FIELD CONDITIONS.

6. THE CONTRACTOR SHALL CONFORM TO THE REQUIREMENTS OF ALL APPLICABLE GOVERNMENT BODIES. AS WELL AS THE REQUIREMENTS OF THE AUTHORITY. ALL REQUIREMENTS DEALING WITH INTERNATIONAL MOVEMENT OF GOODS AND PERSONNEL SHALL BE FOLLOWED.

7. THE CONTRACTOR'S ATTENTION IS DIRECTED TO THE FACT THAT NO SPOIL AREA FOR SURPLUS MATERIAL IS AVAILABLE FOR THIS CONTRACT WITHIN THE AUTHORITY'S RIGHT–OF–WAY. THEREFORE, ALL MATERIAL TO BE REMOVED FROM THE JOB SITE SHALL BE DISPOSED OF BY THE CONTRACTOR OFF THE AUTHORITY'S PROPERTY. ALL COSTS ASSOCIATED WITH THE SPOIL AREA AND REMOVAL OF SPOIL MATERIAL SHALL BE INCLUDED IN THE VARIOUS ITEMS OF THE CONTRACT. IT IS THE CONTRACTOR'S RESPONSIBILITY TO SUPPLY/SECURE A STORAGE AREA FOR THEIR MATERIALS AND EQUIPMENT SEE SHEET FOR AVAILABLE LAYDOWN AREAS ON AUTHORITY PROPERTY.

8. CONTRACTOR SHALL COORDINATE ALL WORK ACTIVITIES WHERE APPLICABLE, WITH ADJACENT CONTRACTORS OR ON–GOING WORK OPERATIONS. THIS SHALL INCLUDE, BUT IS NOT LIMITED TO, ANNUAL BRIDGE INSPECTION, FEATURE LIGHTING, BRIDGE PAINTING, AUTHORITY MAINTENANCE AND REPAIR WORK OR OTHER ACTIVITIES.

9. WHENEVER ITEMS IN THE CONTRACT REQUIRE MATERIALS TO BE REMOVED AND DISPOSED OF, ALL RELATED COSTS INCLUDING THE COST OF SUPPLYING A DISPOSAL AREA AND TRANSPORTATION TO THAT AREA SHALL BE INCLUDED IN THE COST FOR THIS WORK.

10. THE CONTRACTOR SHALL COORDINATE AND SCHEDULE THE NEW WORK TO PREVENT CONFLICTS AND INTERFERENCES FROM OCCURRING. ANY ADDITIONAL WORK OR COSTS AS A RESULT OF THE CONTRACTOR NOT PERFORMING THE WORK IN A COORDINATED MANNER SHALL BE AT THE CONTRACTOR'S OWN EXPENSE WITH NO ADDITIONAL COST TO THE AUTHORITY.

11. IN THE EVENT THAT GROUND WATER IS ENCOUNTERED DURING THE COURSE OF CONSTRUCTION, THE COST OF DEWATERING, PUMPING, BAILING OR DRAINING NECESSARY TO KEEP THE EXCAVATION FREE OF WATER SHALL BE INCLUDED IN THE UNIT PRICE BID FOR THE EXCAVATION.

FIELD INSPECTION PRIOR TO BIDDING

1. IT SHALL BE THE CONTRACTOR'S RESPONSIBILITY TO VERIFY EXISTING FIELD CONDITIONS BEFORE BIDDING ON THE PROJECT.

DIMENSIONS

1. THE CONTRACTOR SHALL EXAMINE AND VERIFY. IN THE FIELD, ALL CONDITIONS AND DIMENSIONS. DIMENSIONS OF THE EXISTING STRUCTURES SHOWN ON THESE PLANS ARE FOR GENERAL REFERENCE ONLY. THEY HAVE BEEN TAKEN FROM THE ORIGINAL CONSTRUCTION OR SUBSEQUENT REHABILITATION DRAWINGS AND ARE NOT GUARANTEED. THE CONTRACTOR SHALL NOT SCALE THESE CONTRACT DOCUMENTS FOR DIMENSIONS OR DISTANCES. THE CONTRACTOR SHALL TAKE ALL SUCH FIELD MEASUREMENTS TO ASSURE PROPER FIT OF THE FINISHED WORK. AND THE CONTRACTOR SHALL ASSUME FULL RESPONSIBILITY FOR THEIR ACCURACY. IF FIELD CONDITIONS AND DIMENSIONS DIFFER FROM THOSE SHOWN ON THE PLANS. THE CONTRACTOR SHALL USE THE FIELD CONDITIONS AND DIMENSIONS AND MAKE THE APPROPRIATE CHANGES TO THOSE SHOWN ON THE PLANS. SUBJECT TO THE APPROVAL OF THE ENGINEER. WHEN SHOP DRAWINGS BASED ON FIELD MEASUREMENTS ARE SUBMITTED FOR APPROVAL. THE FIELD MEASUREMENTS MADE SHALL BE INDICATED ON THE SHOP DRAWINGS SUBMITTED FOR REFERENCE OF THE REVIEWER. DO NOT SCALE THE PLANS FOR CONSTRUCTION DIMENSIONS.

UTILITIES

1. LOCATION OF UTILITIES, PUBLIC AND/OR PRIVATE, INDICATED AS EXISTING AND/OR TO BE CONSTRUCTED AS SHOWN ON THE PLAINS ARE APPROXIMATE ONLY. THEIR EXACT LOCATION SHALL BE DETERMINED IN THE FIELD.

2. THE CONTRACTOR'S ATTENTION IS DIRECTED TO THE FACT THAT CONDUITS MAY BE PRESENT. THEIR EXISTENCE AND LOCATIONS SHALL BE FIELD VERIFIED. IF CONDUITS ARE PRESENT AND ARE ENCOUNTERED DURING CONSTRUCTION OPERATIONS. CARE SHALL BE EXERCISED NOT TO DAMAGE CONDUITS. EXPANSION COUPLINGS, OR CONTENTS OF CONDUITS. ANY DAMAGE SHALL BE REPAIRED TO THE SATISFACTION OF THE ENGINEER. AT NO COST TO THE AUTHORITY.

3. THE CONTRACTOR SHALL BE RESPONSIBLE FOR THE MAINTENANCE OF ALL EXISTING UTILITIES AFFECTED BY HIS WORK FOR THE DURATION OF THE CONTRACT. COST TO BE INCLUDED IN THE VARIOUS CONTRACT ITEMS.

4. THE CONTRACTOR IS ADVISED THAT THE PEACE BRIDGE CARRIES MAJOR COMMUNICATION UTILITIES IN THIS WORK ZONE. THE CONTRACTOR SHALL TAKE CARE NOT TO DISTURB THESE UTILITIES. IT IS THE CONTRACTOR'S RESPONSIBILITY TO CONTACT THE APPROPRIATE COMPANY PRIOR TO PERFORMING ANY WORK WHICH, IN THE CONTRACTOR'S OPINION, OR ENGINEER'S OPINION WILL JEOPARDIZE THE UTILITIES. THE CONTRACTOR WILL BE SOLELY RESPONSIBLE FOR ANY DAMAGE OCCURRING TO THESE UTILITIES.

5. ALL ELECTRICAL WORK SHALL CONFORM TO ALL PROVISIONS OF THE CANADIAN ELECTRICAL CODE, LOCAL CODES, MOL AND OSHA; WHERE CODES CONFLICT, THE MOST STRINGENT SHALL APPLY.

6. ILLUMINATION WITHIN THE WORK ZONE SHALL BE MAINTAINED DURING NIGHT TIME CONDITIONS. THE CONTRACTOR SHALL MAKE USE OF COMBINATIONS OF EXISTING LIGHTING EQUIPMENT, TEMPORARY LIGHTING PROVIDED BY CONTRACTOR AND FINAL LIGHTING INSTALLATION. TEMPORARY LIGHTING PROVIDED BY CONTRACTOR SHALL PROVIDE ILLUMINANCE LIGHTING LEVELS OF 25 LUX, 3:1 AVG./MIN, MAX /MIN OF 6:1. THE CONTRACTOR SHALL SUPPLY A LIGHTING PLAN DETAILING ILLUMINATION LEVELS TO THE ENGINEER FOR REVIEW AND APPROVAL.

EXISTING BRIDGE AND FACILITIES

1. THE CONTRACTOR SHALL PERFORM ALL WORK WITH CARE SO THAT ANY MATERIALS WHICH ARE TO REMAIN IN PLACE. OR WHICH ARE TO REMAIN THE PROPERTY OF THE AUTHORITY, WILL NOT BE DAMAGED.

2. IF THE CONTRACTOR DAMAGES ANY MATERIALS WHICH ARE TO REMAIN IN PLACE, INCLUDING THE EXISTING POLES AND FIXTURES, THE DAMAGED MATERIALS SHALL BE REPAIRED OR REPLACED BY THE CONTRACTOR, TO THE SATISFACTION OF THE ENGINEER, AT NO ADDITIONAL COST TO THE AUTHORITY.
   ALL EXISTING MATERIALS SHALL BE PROTECTED FROM DAMAGE AND SHALL BE CLEANED OF CONCRETE AND OTHER MATERIALS RESULTING FROM THE CONTRACTOR'S ACTIVITIES. THE CONTRACTOR SHALL CLEAN ALL SURROUNDING ROADWAYS, PARKING AREAS, AND BRIDGE ELEMENTS OF DEBRIS AND OTHER MATERIAL CAUSED BY HIS OPERATIONS TO THE SATISFACTION OF THE ENGINEER.

SIGNAGE

1. EXISTING SIGNS DESIGNATED FOR REMOVAL ARE NOT TO BE REMOVED BEFORE BEING REPLACED BY NEW SIGNS A AT THE LOCATIONS CALLED FOR IN THE PLANS. IF EXISTING SIGNS ARE REMOVED BEFORE THE NEW ONES ARE INSTALLED, TEMPORARY SIGNS SHALL BE PROVIDED AT THE LOCATIONS.

2. THE SIGN LOCATIONS SHOWN ON THE PLANS ARE APPROXIMATE. THE EXACT LOCATIONS SHALL BE APPROVED BY THE ENGINEER IN THE FIELD.

MAINTENANCE AND PROTECTION OF TRAFFIC

1. PROTECTION OF THE PUBLIC: THE CONTRACTOR SHALL MAINTAIN AND PROTECT ALL TRAFFIC IN ACCORDANCE WITH THE PROVISIONS OF THE PROJECT SPECIFICATIONS, AS DIRECTED BY THE ENGINEER AND AS REQUIRED BY THE AUTHORITY.

2. THE CONTRACTOR SHALL COORDINATE HIS MAINTENANCE AND PROTECTION OF TRAFFIC ACTIVITIES AND ACCESS NEEDS WITH THE AUTHORITY. LANE CLOSURES REQUIRE PRIOR COORDINATION BETWEEN THE AUTHORITY AND THE CONTRACTOR. THE CLOSING OF LANES WILL ONLY BE PERMITTED WHEN DEEMED NECESSARY BY THE CONTRACTOR'S ACTIVITIES AS APPROVED BY THE ENGINEER. NO CLAIM WILL BE ALLOWED FOR A LANE CLOSURE REFUSAL OR LIMITATION.

3. ALL VEHICLES, EQUIPMENT, CONSTRUCTION WORKERS, AND THEIR ACTIVITIES ARE RESTRICTED AT ALL TIMES TO THE WORK AREA AS SHOWN IN THE PLANS. THE CONTRACTOR SHALL, AT NO TIME ALLOW HIS EMPLOYEE'S VEHICLES TO BE PARKED ON THE BRIDGE, TOLL PLAZAS, OR ACTIVE TRAFFIC AREAS UNDER OR AROUND THE BRIDGE.

4. THE CONTRACTOR SHALL TAKE NOTE THAT THE AREA ADJACENT TO THE WORK AREA IS USED FOR ACTIVE TRAFFIC. THE CONTRACTOR SHALL PLAN CONSTRUCTION OPERATIONS SO THAT THE TRAFFIC IS NOT AFFECTED.

5. WHEN THE CONTRACTOR PERFORMS WORK AT NIGHT, THE WORK SITE SHALL BE ILLUMINATED TO THE SATISFACTION OF THE ENGINEER. THE CONTRACTOR IS TO SUPPLY A LIGHTING PLAN TO THE ENGINEER FOR REVIEW AND APPROVAL.

6. FIXED HAZARDS CURRENTLY PROTECTED SHALL REMAIN PROTECTED AT ALL TIMES. AT LOCATIONS WHERE EXISTING GUIDE RAIL OR CONCRETE BARRIER IS TO BE REMOVED, THE WORK SHALL BE PERFORMED IN A TIMELY MANNER TO MINIMIZE THE TIME THE AREA IS WITHOUT GUIDE RAIL OR CONCRETE BARRIER (PERMANENT OR TEMPORARY). THE WORK SHALL BE FURTHER RESTRICTED AS FOLLOWS:

   A. DRUMS SHALL BE INSTALLED AT INTERVALS TO BE APPROVED BY THE ENGINEER THROUGHOUT THE WORK AREA WHEN GUIDE RAIL OR CONCRETE BARRIER IS REMOVED.

IT IS A VIOLATION OF THE LAW FOR ANY PERSON, UNLESS ACTING UNDER THE DIRECT SUPERVISION OF A LICENSED ARCHITECT OR ENGINEER, TO ALTER AN ITEM IN ANY WAY. IF AN ITEM BEARING THE SEAL OF AN ARCHITECT OR ENGINEER IS ALTERED, THE ALTERING ARCHITECT OR ENGINEER SHALL AFFIX TO THEIR ITEM THE SEAL AND THE NOTATION "ALTERED BY" FOLLOWED BY THEIR SIGNATURE AND THE DATE OF SUCH ALTERATION AND A SPECIFIC DESCRIPTION OF THE ALTERATION.

MARK	DESCRIPTION	DATE	APPR.
A	ISSUED FOR BID (NOT FOR CONST.)	03/21/2024	

DISCLAIMER

DESIGNED BY: M. VELICEVICA
DATE: 03/21/2024
DWN BY: B.M.
CKD BY: M.V.
SOLICITATION NO.:
SUBMITTED BY: WSP CANADA
CONTRACT NO.:
FILE NAME: P:\Projects-Canada\Buffalo-Fort-Erie-Bridge-Authority\Documents\02-Design\1-Drawings\1-Contract Drawings\Contract Drawings\Bridge\1-Bridge\1-Plans\1-Highways\GC-Drawings\GC-Drawings.dwg
PLOTTED BY: B.M.
PLOT DATE: 03/21/2024
SIZE: 22" X 34"

BUFFALO AND FORT ERIE PUBLIC BRIDGE AUTHORITY

WSP CAN Inc.
40 Lavelle Drive
Suite 300
Buffalo, N.Y. 14202
(716) 853-1220

CROSSING PATHS ★ BUILDING FUTURES
THE PEACE BRIDGE

BUFFALO AND FORT ERIE PUBLIC
BRIDGE AUTHORITY
PROJECT# PARE 3.0
GENERAL NOTES

DRAWING NUMBER
G-3

C:\pw_work\wsp-ca18\dms09581\20M-00635-00-G03.dwg Wed, 20 Mar 2024 - 3:34pm DeanG

NOTES:

1. DURING THE CONSTRUCTION OPERATIONS, THE CONTRACTOR SHALL MAINTAIN THE ACCESS CONNECTION AT ALL TIMES. THE CONTRACTOR SHALL COORDINATE WITH THE AUTHORITY FOR APPROVAL OF TIMING FOR THE PAVEMENT REHABILITATION.

2. CONTRACTOR TO COORDINATE WITH THE AUTHORITY FOR APPROVAL FOR ADDITIONAL LANE CLOSURES ARE AREQURIED DURING CONSTRUCTION.

PLAN NORTH

MATCHLINE A–A

COMMERCIAL BRIDGE TRAFFIC

NOTE 1

CONSTRUCTION

TC–1 90x90

TC–2b 90x90

TC–2a 90x90

TC–4 90x90

TC–6 90x90

3.75

10.00m

7.50

LEGEND

CONSTRUCTION AREA

CONTRACTOR LAYDOWN AREA

TC–54

5m 0 10m

Scale

IT IS A VIOLATION OF THE LAW FOR ANY PERSON, UNLESS ACTING UNDER THE DIRECT SUPERVISION OF A LICENSED ARCHITECT OR ENGINEER, TO ALTER IN ANY WAY AN ITEM BEARING THE SEAL OF AN ARCHITECT OR ENGINEER IS ALTERED THE ALTERING ARCHITECT OR ENGINEER SHALL AFFIX TO THEIR ITEM THE LEGEND "ALTERED BY" FOLLOWED BY THEIR NAME OR FIRM, SIGNATURE AND THE DATE OF SUCH ALTERATION AND A SPECIFIC DESCRIPTION OF THE ALTERATION.

DISCLAIMER

MARK	DESCRIPTION	DATE	APPR
A.	ISSUED FOR BID (NOT FOR CONST.)	03/21/2024	

DESIGNED BY: M. VELICEVIC
DATE: 03/21/2024
DWN BY: B.M.
CKD BY: M.V.
SOLICITATION NO.:
SUBMITTED BY: WSP CANADA
CONTRACT NO.:
FILE NAME: C:\pw_work\wsp-ca18\dms09581\20M-00635-00-501.dwg
PLOT DATE: 03/21/2024
SIZE: 22" X 34"
PLOTTED BY: B.M.

BUFFALO AND FORT ERIE PUBLIC BRIDGE AUTHORITY

WSP USA Inc.
40 Lafayette Drive
Suite 300
Buffalo, N.Y. 14202
(716) 853-1283

BUFFALO AND FORT ERIE PUBLIC BRIDGE AUTHORITY
PROJECT# PARE 3.0
STAGING SITE PLAN
STAGE 1

CROSSING PATHS ★ BUILDING FUTURES
THE PEACE BRIDGE

DRAWING NUMBER
S-1

C:\pw_work\wsp-ca18\dms09581\20M-00635-00-501.dwg Wed, 20 Mar 2024 - 4:37pm DeanG

LEGEND

- CONSTRUCTION AREA
- CONTRACTOR LAYDOWN AREA
- TC–54

NOTES:

1. THE CONTRACTOR TO COORDINATE WITH THE AUTHORITY FOR TIMING OF A SIGNLE TRUCK LANE CLOSURE. THE LANE CLOSURE SHALL ONLY BE IN PLACE DURING ACTIVE CONSTRUCTION.
2. THE CONTRACTOR TO COORDINATE WITH THE AUTHORITY ON THE PLACEMENT OF THE CONSTRUCTION SITE TRAILER WITHIN THE LAYDOWN AREA.

PLAN NORTH

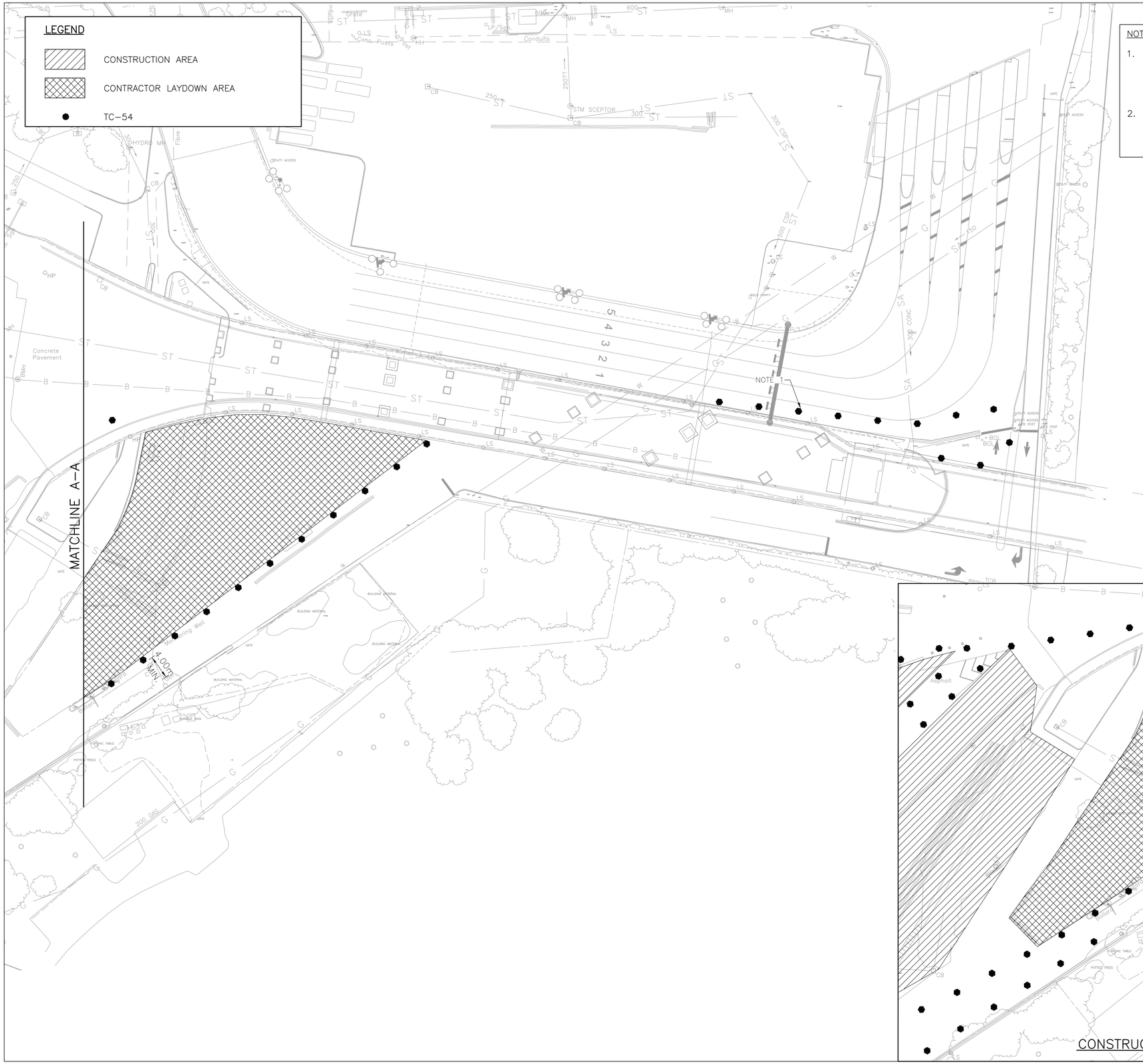

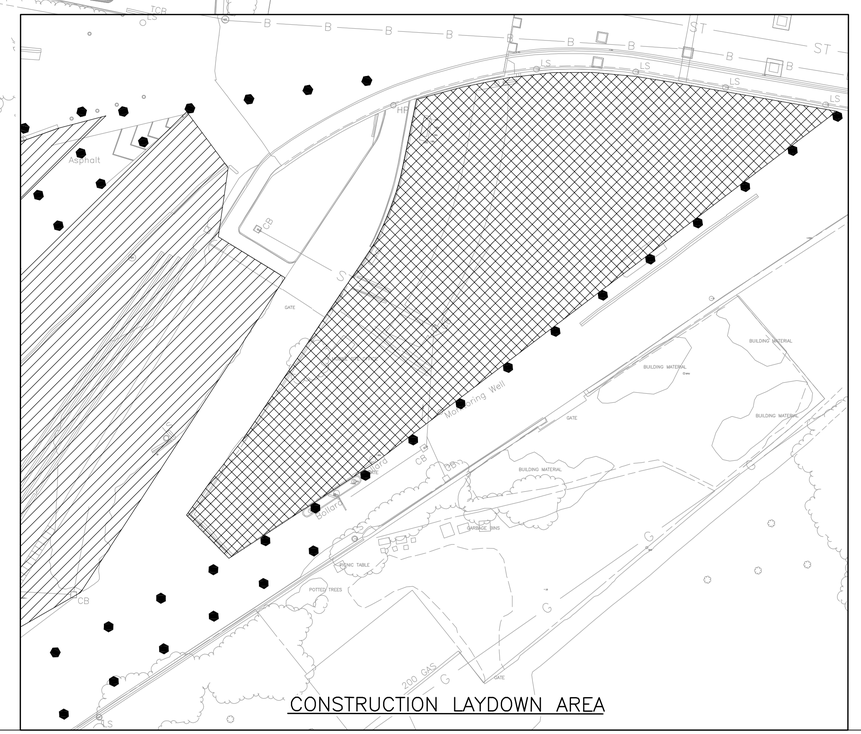

CONSTRUCTION LAYDOWN AREA

5m 0 10m
Scale

IT IS A VIOLATION OF THE LAW FOR ANY PERSON, UNLESS ACTING UNDER THE DIRECT SUPERVISION OF A LICENSED ARCHITECT OR ENGINEER, TO ALTER AN ITEM IN ANY WAY. IF AN ITEM BEARING THE SEAL OF AN ARCHITECT OR ENGINEER IS ALTERED, THE ALTERING ARCHITECT OR ENGINEER SHALL AFFIX TO THEIR ITEM THE SEAL AND THE NOTATION "ALTERED BY" FOLLOWED BY THEIR SIGNATURE AND THE DATE OF SUCH ALTERATION AND A SPECIFIC DESCRIPTION OF THE ALTERATION.

DISCLAIMER

MARK	DESCRIPTION	DATE	APPR.
A	ISSUED FOR BID (NOT FOR CONST.)	03/21/2024	

DESIGNED BY: M. VELICEVIC
DWN BY: B.M.
CKD BY: M.V.
SUBMITTED BY: WSP CANADA
FILE NAME: P:\projects\canada\buffalo-niagara-bridge\00035\00035-00\02-design\1.1 WP4.1.1.1 Highway\01 Drawings\00035-00-S02
PLOTTED BY: B.M.
SIZE: 22" X 34"
DATE: 03/21/2024
SOLICITATION NO.:
CONTRACT NO.:
PLOT DATE: 03/21/2024

BUFFALO AND FORT ERIE PUBLIC BRIDGE AUTHORITY

wsp
WSP, USA Inc.
40 Lavelle Drive
Suite 300
Buffalo, N.Y. 14202
(716) 853–1220

BUFFALO AND FORT ERIE PUBLIC BRIDGE AUTHORITY
PROJECT# PARE 3.0

STAGING SITE PLAN
STAGE 1

CROSSING PATHS ★ BUILDING FUTURES
THE PEACE BRIDGE

DRAWING NUMBER
S-2

C:\pw_work\wsp-ca18\dms09581\20M-00635-00-S02.dwg Wed, 20 Mar 2024 - 4:00pm DeanG

NOTES:

1. DURING THE CONSTRUCTION OPERATIONS, THE CONTRACTOR SHALL MAINTAIN THE ACCESS CONNECTION AT ALL TIMES. THE CONTRACTOR SHALL COORDINATE WITH THE AUTHORITY FOR APPROVAL OF TIMING FOR THE PAVEMENT REHABILITATION.
2. CONTRACTOR TO COORDINATE WITH THE AUTHORITY FOR APPROVAL FOR ADDITIONAL LANE CLOSURES ARE AREQURIED DURING CONSTRUCTION.

PLAN NORTH

CONSTRUCTION

TC-1 90x90

TC-26 90x90

TC-22 90x90

TC-4 90x90

NOTE 1

COMMERCIAL BRIDGE TRAFFIC

3.75

6.00

10.00m

7.50

LEGEND

- CONSTRUCTION AREA
- CONTRACTOR LAYDOWN AREA
- COMPLETED CONSTRUCTION
- TC-54

5m 0 10m
Scale

IT IS A VIOLATION OF THE LAW FOR ANY PERSON, UNLESS ACTING UNDER THE DIRECT SUPERVISION OF A LICENSED ARCHITECT OR ENGINEER, TO ALTER IN ANY WAY AN ITEM BEARING THE SEAL OF AN ARCHITECT OR ENGINEER IS ALTERED THE ALTERING ARCHITECT OR ENGINEER SHALL AFFIX TO THEIR ITEM THE SEAL AND THE WORDS "ALTERED BY" FOLLOWED BY THEIR SIGNATURE AND THE DATE OF SUCH ALTERATION AND A SPECIFIC DESCRIPTION OF THE ALTERATION.

DISCLAIMER

MARK	DESCRIPTION	DATE	APPR
A.	ISSUED FOR BID (NOT FOR CONST.)	03/21/2024	

DESIGNED BY: M. VELICEVIC
DWN BY: B.M.
CKD BY: M.V.
SUBMITTED BY: WSP CANADA
DATE: 03/21/2024
SOLICITATION NO.:
CONTRACT NO.:
FILE NAME: C:\pw_work\wsp-ca18\dms09581\20M-00635-00-503.dwg
PLOT DATE: 03/21/2024
SIZE: 22" X 34"
PLOTTED BY: B.M.

BUFFALO AND FORT ERIE PUBLIC BRIDGE AUTHORITY

WSP USA Inc.
40 Lafayette Drive
Suite 300
Buffalo, N.Y. 14202
(716) 853-1220

BUFFALO AND FORT ERIE PUBLIC BRIDGE AUTHORITY PROJECT# PARE 3.0
STAGING SITE PLAN
STAGE 2

CROSSING PATHS BUILDING FUTURES
THE PEACE BRIDGE

DRAWING NUMBER
S-3

C:\pw_work\wsp-ca18\dms09581\20M-00635-00-503.dwg Wed, 20 Mar 2024 - 4:33pm DeanG

LEGEND

- REMOVAL OF ASPHALT PAVEMENT FULL DEPTH
- REMOVAL OF ASPHALT INLAND 50mm
- REMOVE CONCRETE PAVEMENT
- REMOVE EXISTING LANDSCAPING
- ARMOUR STONE TO BE SALVAGED
- EXISTING TEMPORARY CONCRETE BARRIER WITH FENCE

NOTES:

1. PERIMETER FENCE TO BE REPLACED IN CONJUNCTION WITH THE CONSTRUCTION OF THE NEW PERIMETER FENCING. CONTRACTOR TO ENSURE THE THE SITE PERIMETER FENCING IS SECURE. NO GAPS IN THE PERIMETER FENCING ARE PERMITTED WHEN CONSTRUCTION IS INACTIVE.
2. EXISTING SALT BUILDING SHALL REMAIN UNTIL SUCH TIME AS THE NEW SALT BUILDING HAS BEEN CONSTRUCTED AND IS ACTIVE. THE CONTRACTOR TO OBTAIN APPROVAL FROM THE AUTHORITY PRIOR TO THE REMOVAL OF THE EXISTING SALT BUILDING.
3. PAVEMENT MARKING IN THE TRUCK INSPECTION PARKING AREA TO BE REMOVED. REFER TO PAVEMENT MARKING AND SIGNAGE PLAN.

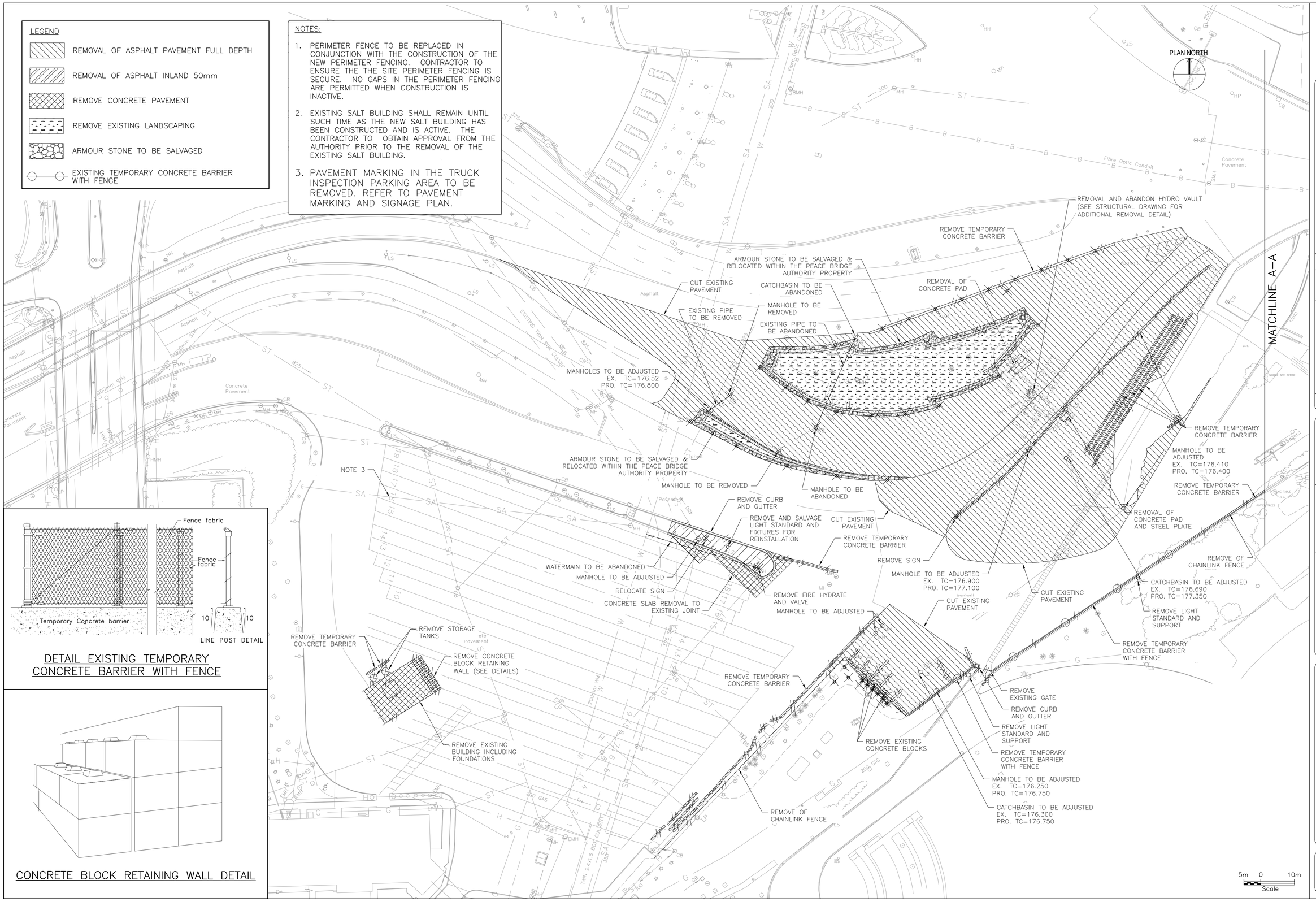

DETAIL EXISTING TEMPORARY CONCRETE BARRIER WITH FENCE

CONCRETE BLOCK RETAINING WALL DETAIL

MARK	DESCRIPTION	DATE	APPR.
A	ISSUED FOR BID (NOT FOR CONST.)	03/21/2024	

IT IS A VIOLATION OF THE LAW FOR ANY PERSON, UNLESS ACTING UNDER THE DIRECT SUPERVISION OF A LICENSED ARCHITECT OR ENGINEER, TO ALTER AN ITEM IN ANY WAY. IF AN ITEM BEARING THE SEAL OF AN ARCHITECT OR ENGINEER IS ALTERED, THE ALTERING ARCHITECT OR ENGINEER SHALL AFFIX TO THEIR ITEM THE SEAL AND THE NOTATION "ALTERED BY" FOLLOWED BY THEIR SIGNATURE AND THE DATE OF SUCH ALTERATION AND A SPECIFIC DESCRIPTION OF THE ALTERATION.

DISCLAIMER

DESIGNED BY: M. VELICGEVIC
DWN BY: B.M.
CKD BY: M.V.
SUBMITTED BY: WSP CANADA
DATE: 03/21/2024
SOLICITATION NO.:
CONTRACT NO.:
FILE NAME: C:\pw_work\wsp-ca18\dms09581\20M-00635-00-R01.dwg
SIZE: 22" X 34"
PLOTTED BY: B.M.
PLOT DATE: 03/21/2024

WSP Canada Inc.
40 Lathrop Avenue
Suite 300
Buffalo, NY, 14202
(716) 853-1220

BUFFALO AND FORT ERIE PUBLIC BRIDGE AUTHORITY

BUFFALO AND FORT ERIE PUBLIC BRIDGE AUTHORITY
PROJECT# PARE 3.0
REMOVALS

CROSSING PATHS ★ BUILDING FUTURES
THE PEACE BRIDGE

DRAWING NUMBER
R-1

C:\pw_work\wsp-ca18\dms09581\20M-00635-00-R01.dwg Wed, 20 Mar 2024 - 4:48pm DeanG

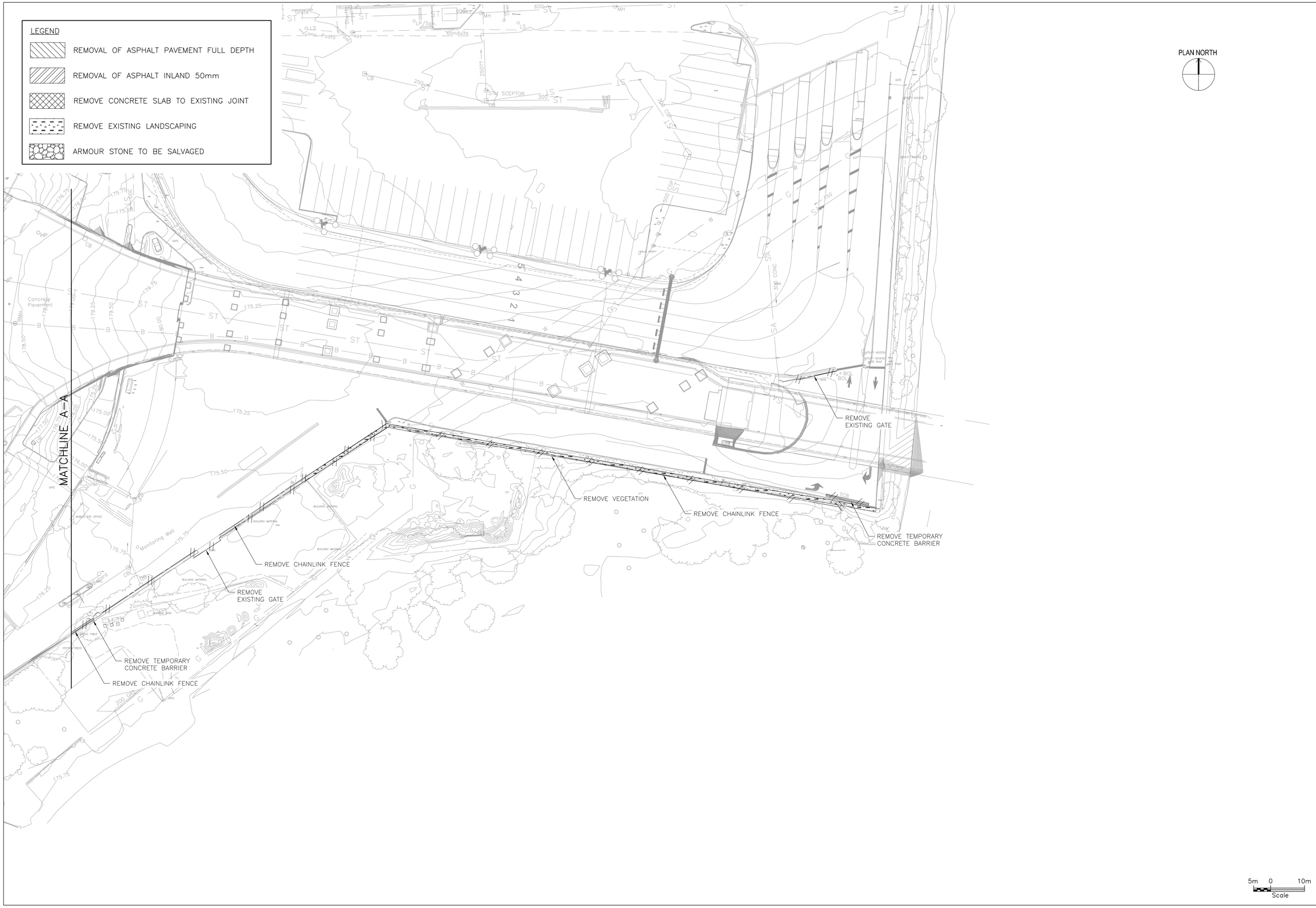

IT IS A VIOLATION OF THE LAW FOR ANY PERSON, UNLESS ACTING UNDER THE DIRECT SUPERVISION OF A LICENSED ARCHITECT OR ENGINEER, TO ALTER AN ITEM IN ANY WAY. IF AN ITEM BEARING THE SEAL OF AN ARCHITECT OR ENGINEER IS ALTERED, THE ALTERING ARCHITECT OR ENGINEER SHALL AFFIX TO THEIR ITEM THE SEAL AND THE NOTATION "ALTERED BY" FOLLOWED BY THEIR SIGNATURE AND THE DATE OF SUCH ALTERATION AND A SPECIFIC DESCRIPTION OF THE ALTERATION.

DISCLAIMER

MARK	DESCRIPTION	DATE	APPR.
A	ISSUED FOR BID (NOT FOR CONST.)	03/21/2024	

DESIGNED BY: M. VELICEVIC
DATE: 03/21/2024
DWN BY: B.M.
CKD BY: M.V.
SOLICITATION NO.:
SUBMITTED BY: WSP CANADA
CONTRACT NO.:
FILE NAME: C:\pw_work\wsp-ca18\dms09581\20M-00635-00-R02.dwg
PLOTTED BY: B.M.
PLOT DATE: 03/21/2024
SIZE: 22" X 34"

WSP USA Inc.
401 Jefferson Drive
Suite 300
Buffalo, NY 14202
(716) 853-1220

BUFFALO AND FORT ERIE PUBLIC BRIDGE AUTHORITY

BUFFALO AND FORT ERIE PUBLIC BRIDGE AUTHORITY
PROJECT# PARE 3.0

REMOVALS

CROSSING PATHS ★ BUILDING FUTURES
THE PEACE BRIDGE

DRAWING NUMBER
R-2

C:\pw_work\wsp-ca18\dms09581\20M-00635-00-R02.dwg Thu, 21 Mar 2024 - 9:36am DeanG

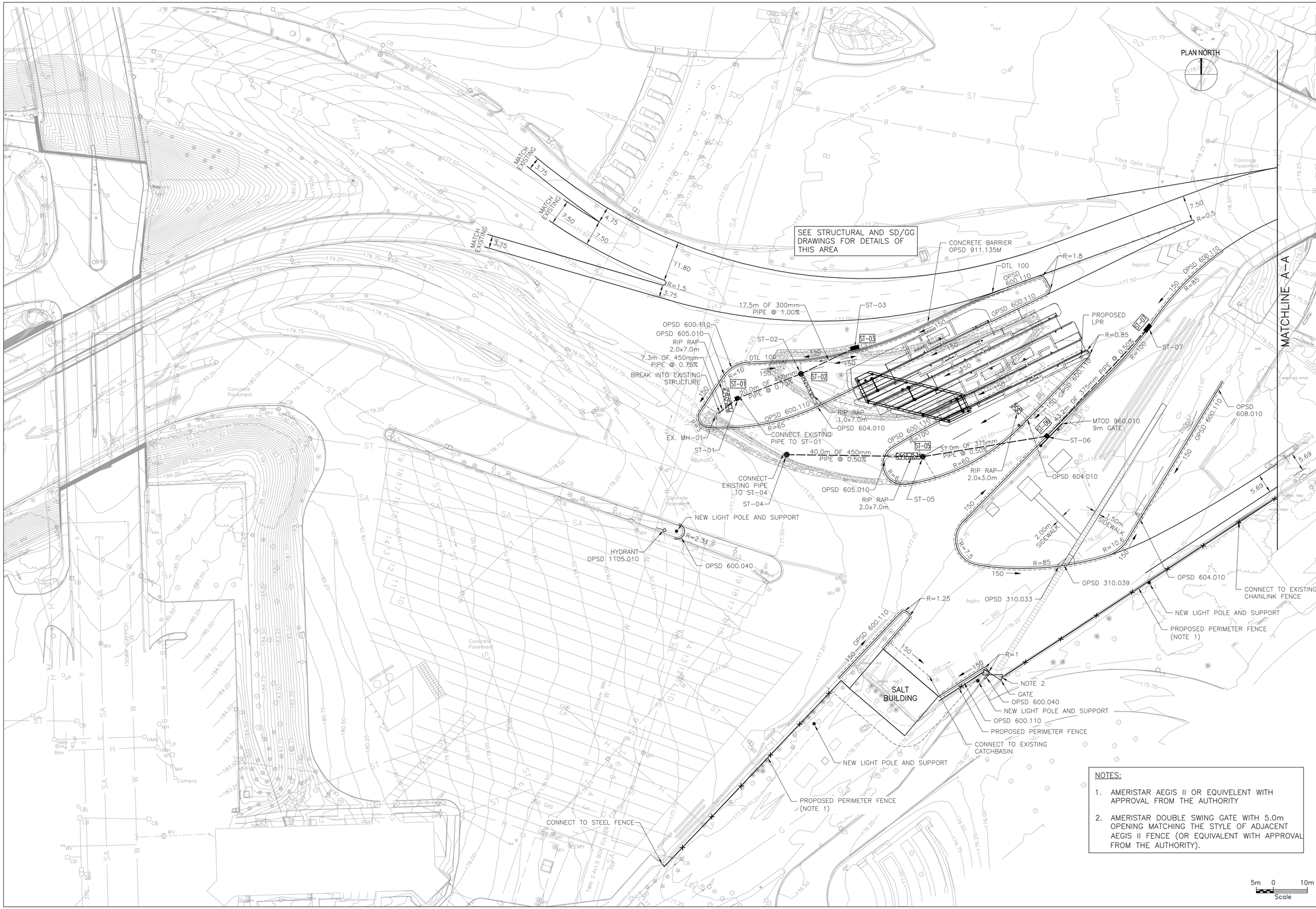

NOTES:

1. AMERISTAR AEGIS II OR EQUIVELENT WITH APPROVAL FROM THE AUTHORITY
2. AMERISTAR DOUBLE SWING GATE WITH 5.0m OPENING MATCHING THE STYLE OF ADJACENT AEGIS II FENCE (OR EQUIVALENT WITH APPROVAL FROM THE AUTHORITY).

IT IS A VIOLATION OF THE LAW FOR ANY PERSON, UNLESS ACTING UNDER THE DIRECT SUPERVISION OF A LICENSED ARCHITECT OR ENGINEER, TO ALTER AN ITEM IN ANY WAY. IF AN ITEM BEARING THE SEAL OF AN ARCHITECT OR ENGINEER IS ALTERED, THE ALTERING ARCHITECT OR ENGINEER SHALL AFFIX TO THEIR ITEM THE SEAL AND THE NOTATION "ALTERED BY" FOLLOWED BY THEIR SIGNATURE AND A SPECIFIC DESCRIPTION OF THE ALTERATION AND A SPECIFIC DESCRIPTION OF THE ALTERATION.

DISCLAIMER

MARK	DESCRIPTION	DATE	APPR.
A	ISSUED FOR BID (NOT FOR CONST.)	03/21/2024	

DESIGNED BY: M. VELICEVIC
DWN BY: B.M.
CKD BY: M.V.
SUBMITTED BY: WSP CANADA
FILE NAME: C:\pw_work\wsp-ca18\dms09581\20M-00635-00-N01.dwg
SIZE: 22" X 34"
PLOTTED BY: B.M.
DATE: 03/21/2024
SOLICITATION NO.:
CONTRACT NO.:
PLOTTED: Thu, 21 Mar 2024 - 9:11am DeanG
Layout: N-1 WPM_L.T.I. (Alignment)
DATE: 03/21/2024

WSP USA Inc.
40 Lavelle Drive
Suite 201
Buffalo, NY, 14202
(716) 853-1220

BUFFALO AND FORT ERIE PUBLIC BRIDGE AUTHORITY

BUFFALO AND FORT ERIE PUBLIC BRIDGE AUTHORITY
PROJECT# PARE 3.0
NEW CONSTRUCTION

CROSSING PATHS BUILDING FUTURES
THE PEACE BRIDGE

DRAWING NUMBER
N-1

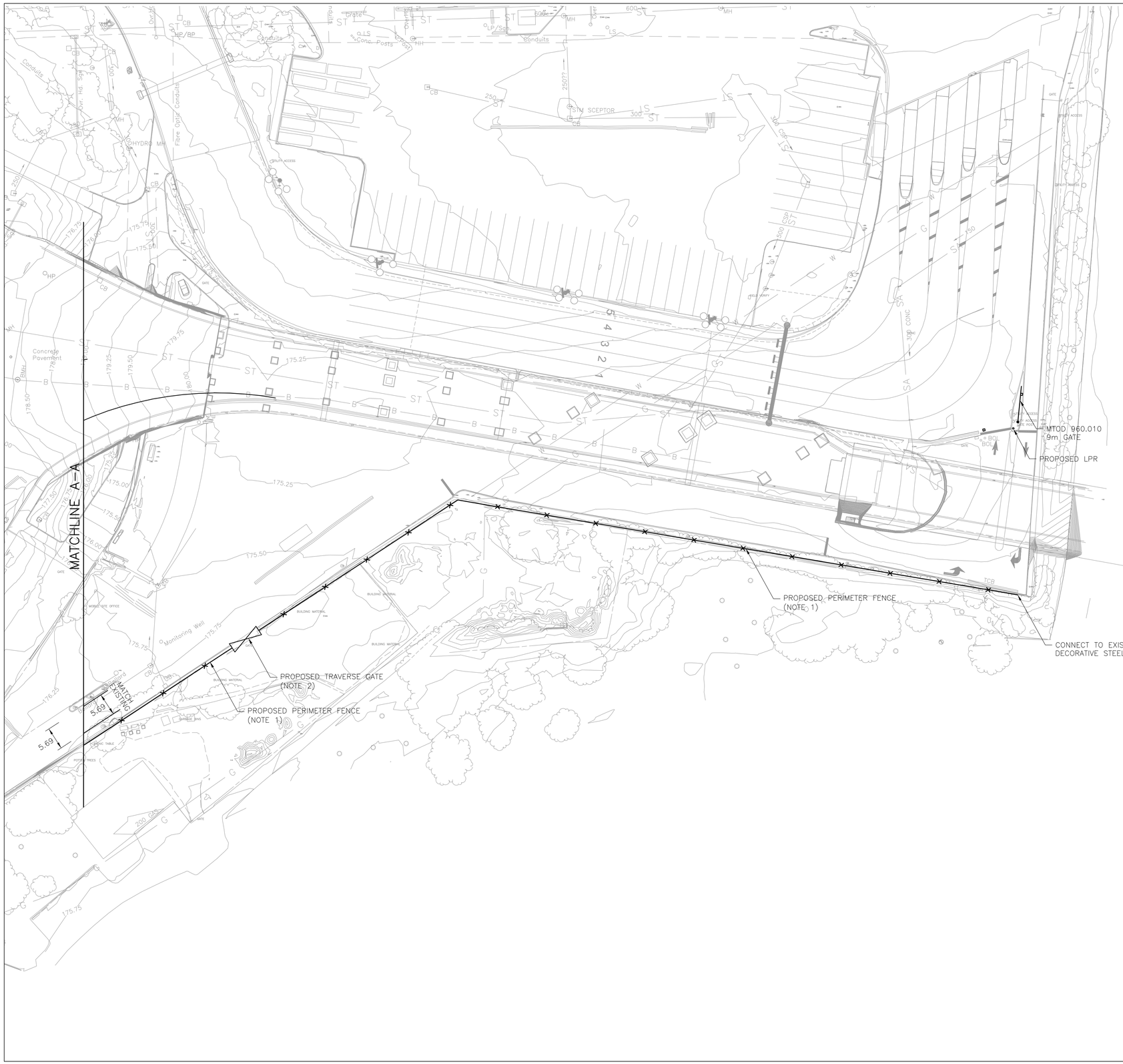

NOTES:

1. AMERISTAR AEGIS II OR EQUIVELENT WITH APPROVAL FROM THE AUTHORITY
2. AMERISTAR TRAVERSE GATE WITH 8.0m OPENING MATCHING THE STYLE OF ADJACENT AEGIS II FENCE (OR EQUIVALENT WITH APPROVAL FROM THE AUTHORITY).

5m 0 10m
Scale

IT IS A VIOLATION OF THE LAW FOR ANY PERSON, UNLESS ACTING UNDER THE DIRECT SUPERVISION OF A LICENSED ARCHITECT OR ENGINEER, TO ALTER AN ITEM IN ANY WAY. IF AN ITEM BEARING THE SEAL OF AN ARCHITECT OR ENGINEER IS ALTERED, THE ALTERING ARCHITECT OR ENGINEER SHALL AFFIX TO THEIR ITEM THE SEAL AND THE NOTATION "ALTERED BY" FOLLOWED BY THEIR SIGNATURE AND THE DATE OF SUCH ALTERATION AND A SPECIFIC DESCRIPTION OF THE ALTERATION.

DISCLAIMER

MARK	DESCRIPTION	DATE	APPR.
A	ISSUED FOR BID (NOT FOR CONST.)	03/21/2024	

DESIGNED BY: M. VELICEVIC
DWN BY: B.M.
CKD BY: M.V.
SUBMITTED BY: WSP CANADA
FILE NAME: C:\pw_work\wsp-ca18\dms09581\20M-00635-00-N02.dwg
PLOTTED BY: B.M.
PLOT DATE: 03/21/2024
SIZE: 22" X 34"
DATE: 03/21/2024
SOLICITATION NO.:
CONTRACT NO.:

BUFFALO AND FORT ERIE PUBLIC BRIDGE AUTHORITY

WSP USA Inc.
421 Ontario Street
Buffalo, NY 14202
(716) 853-1220

BUFFALO AND FORT ERIE PUBLIC BRIDGE AUTHORITY
PROJECT# PARE 3.0
NEW CONSTRUCTION

CROSSING PATHS ★ BUILDING FUTURES
THE PEACE BRIDGE

DRAWING NUMBER
N-2

C:\pw_work\wsp-ca18\dms09581\20M-00635-00-N02.dwg Thu, 21 Mar 2024 - 9:34am DeanG

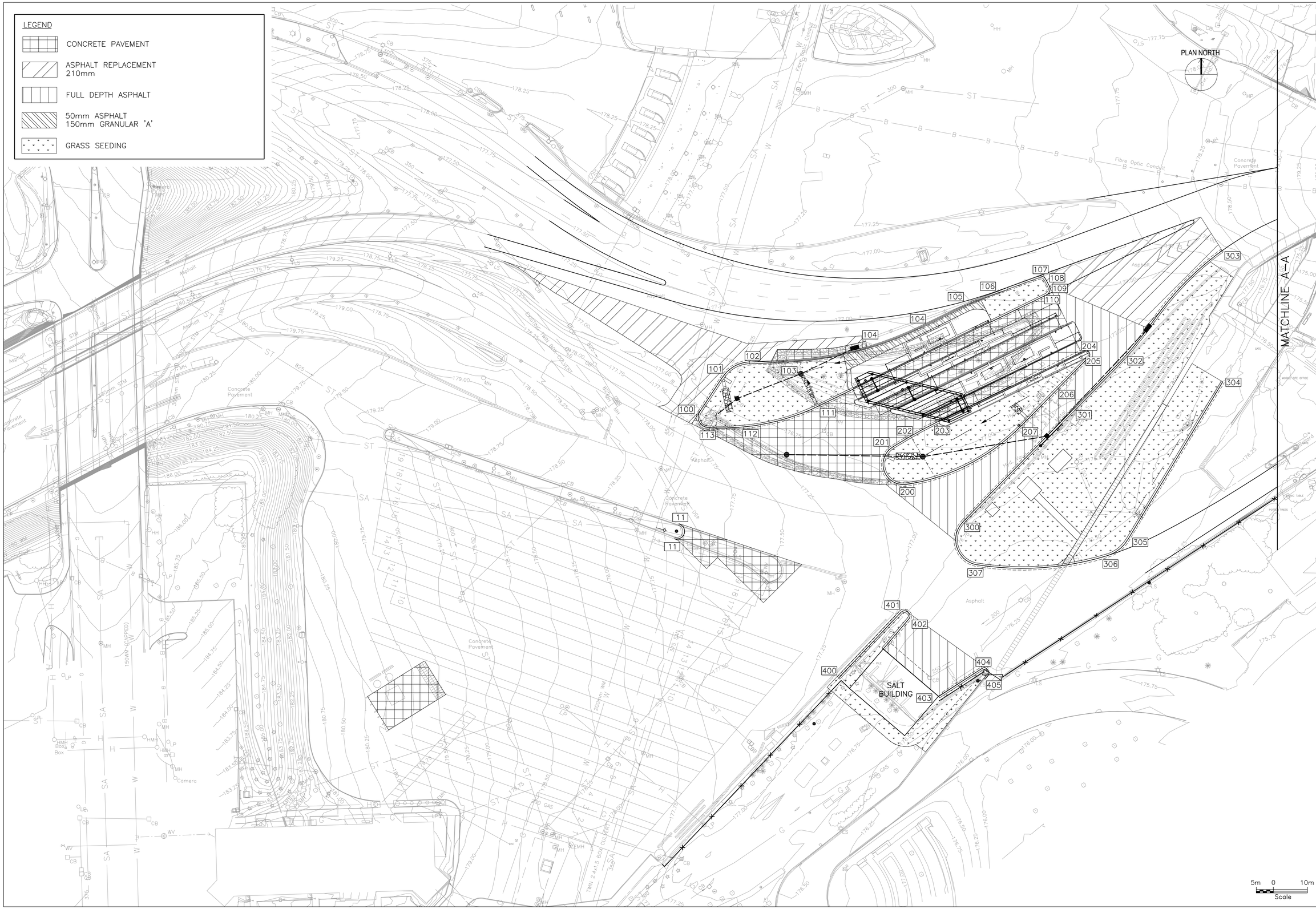

IT IS A VIOLATION OF THE LAW FOR ANY PERSON, UNLESS ACTING UNDER THE DIRECT SUPERVISION OF A LICENSED ARCHITECT OR ENGINEER, TO ALTER AN ITEM IN ANY WAY. IF AN ITEM BEARING THE SEAL OF AN ARCHITECT OR ENGINEER IS ALTERED, THE ALTERING ARCHITECT OR ENGINEER SHALL AFFIX TO THEIR ITEM THE SEAL AND THE NOTATION "ALTERED BY" FOLLOWED BY THEIR SIGNATURE AND DATE. THE NOTATION SHALL INCLUDE A SPECIFIC DESCRIPTION OF THE ALTERATION.

DISCLAIMER

MARK	DESCRIPTION	DATE	APPR.
A	ISSUED FOR BID (NOT FOR CONST.)	03/21/2024	

DESIGNED BY: M. VELICEVIC
DWN BY: B.M.
CKD BY: M.V.
SUBMITTED BY: WSP CANADA
FILE NAME: pw:\\na-cas-pw.bentley.com:pw-ca-01\documents\300135000\300135000-04\N3
SIZE: 22" X 34"
PLOTTED BY: B.M.
DATE: 03/21/2024
SOLICITATION NO.:
CONTRACT NO.:
PLOT DATE: 03/21/2024

BUFFALO AND FORT ERIE PUBLIC BRIDGE AUTHORITY

WSP Civil Inc.
40 Lavelle Drive
Suite 300
Tonawanda, NY, 14202
(716) 853-1220

BUFFALO AND FORT ERIE PUBLIC BRIDGE AUTHORITY
PROJECT# PARE 3.0
NEW CONSTRUCTION
PAVEMENTS
STRUCTURES

CROSSING PATHS ★ BUILDING FUTURES
THE PEACE BRIDGE

DRAWING NUMBER
N-3

C:\pw_wrk\wsp-ca18\dms09581\20M-00635-00-N04.dwg Wed, 20 Mar 2024 - 5:09pm DeanG

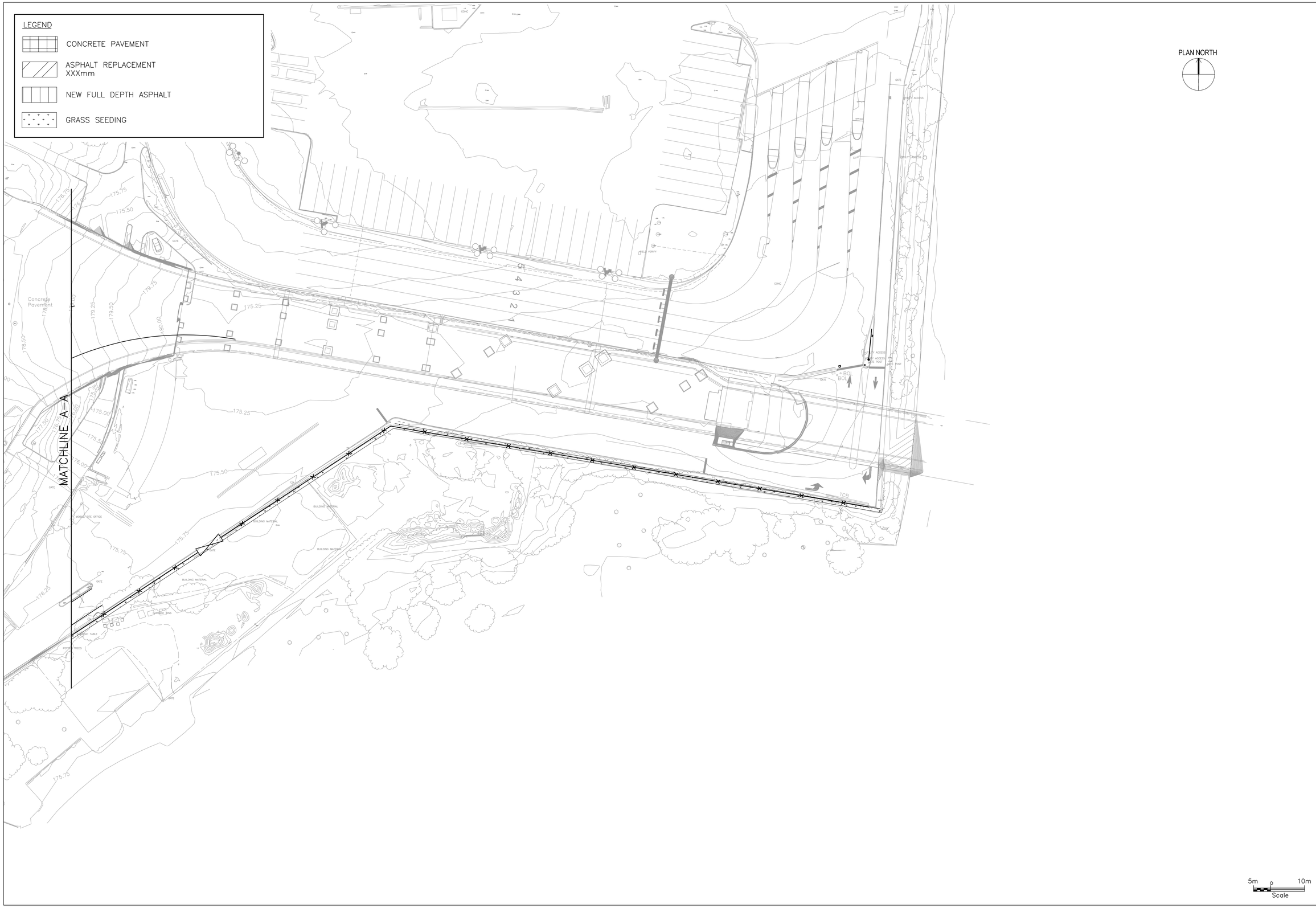

IT IS A VIOLATION OF THE LAW FOR ANY PERSON, UNLESS ACTING UNDER THE DIRECT SUPERVISION OF A LICENSED ARCHITECT OR ENGINEER, TO ALTER AN ITEM IN ANY WAY. IF AN ITEM BEARING THE SEAL OF AN ARCHITECT OR ENGINEER IS ALTERED, THE ALTERING ARCHITECT OR ENGINEER SHALL AFFIX TO THEIR ITEM THE SEAL AND THE NOTATION "ALTERED BY" FOLLOWED BY THEIR SIGNATURE AND THE DATE OF SUCH ALTERATION AND A SPECIFIC DESCRIPTION OF THE ALTERATION.

DISCLAIMER

MARK	DESCRIPTION	DATE	APPR.
A	ISSUED FOR BID (NOT FOR CONST.)	03/21/2024	

DESIGNED BY: M. VELICEVIC
DATE: 03/21/2024
DWN BY: B.M.
CKD BY: M.V.
SOLICITATION NO.:
SUBMITTED BY: WSP CANADA
CONTRACT NO.:
FILE NAME: C:\PW_WORK\DMS09581\WSP-CA1B\DM09581-00635-00-N05.DWG
Dwg=N-L1, LV=PL-L1-1, Vp=auto, Pt=CTB=WSP-Colour-Plot-Styles.ctb=WSP-Colour-Plot-Styles.ctb
PLOTTED BY: B.M.
PLOT DATE: 03/21/2024
SIZE: 22" X 34"

BUFFALO AND FORT ERIE PUBLIC BRIDGE AUTHORITY

WSP Q2A Inc.
421 Ontario Street
Buffalo, NY 14202
(716) 853-1220

BUFFALO AND FORT ERIE PUBLIC
BRIDGE AUTHORITY
PROJECT# PARE 3.0

NEW CONSTRUCTION
PAVEMENTS
STRUCTURES

CROSSING PATHS ★ BUILDING FUTURES
THE PEACE BRIDGE

DRAWING NUMBER
N-4

C:\pw_work\wsp-ca1B\dms09581\20M-00635-00-N05.dwg Wed, 20 Mar 2024 - 5:14pm DeanG

IT IS A VIOLATION OF THE LAW FOR ANY PERSON, UNLESS ACTING UNDER THE DIRECT SUPERVISION OF A LICENSED ARCHITECT OR ENGINEER, TO ALTER AN ITEM IN ANY WAY. IF AN ITEM BEARING THE SEAL OF AN ARCHITECT OR ENGINEER IS ALTERED, THE ALTERING ARCHITECT OR ENGINEER SHALL AFFIX TO THEIR ITEM THE SEAL AND THE NOTATION "ALTERED BY" FOLLOWED BY THEIR SIGNATURE AND THE DATE OF SUCH ALTERATION AND A SPECIFIC DESCRIPTION OF THE ALTERATION.

MARK	DESCRIPTION	DATE	APPR.
A	ISSUED FOR BID (NOT FOR CONST.)	03/21/2024	

DISCLAIMER

DESIGNED BY: M. VELICEVIC
DWN BY: B.M.
CKD BY: M.V.
SUBMITTED BY: WSP CANADA
FILE NAME: C:\pw_work\pw_wsp_ca\d0635_buffaloandfortpublicbridge\d0635_buffaloandfortpublicbridge_design_v3.1.1_lightweight_v2023_v3.1.1_lightweight_v2023.dwg
SIZE: 22" X 34"
PLOTTED BY: B.M.
PLOT DATE: 03/21/2024
DATE: 03/21/2024
SOLICITATION NO.:
CONTRACT NO.:

BUFFALO AND FORT ERIE PUBLIC BRIDGE AUTHORITY

WSP USA Inc.
40 Lafayette Street
Buffalo, N.Y. 14202
(716) 853-1220

BUFFALO AND FORT ERIE PUBLIC BRIDGE AUTHORITY
PROJECT# PARE 3.0

PAVEMENT ELEVATIONS

CROSSING PATHS ★ BUILDING FUTURES
THE PEACE BRIDGE

DRAWING NUMBER
N-5

C:\pw_wrk\wsp-ca18\gms0958t\20M-00635-00-N03.dwg Wed, 20 Mar 2024 - 5:20pm DeanG

STORM SEWER PROFILE ST-01 TO ST-03

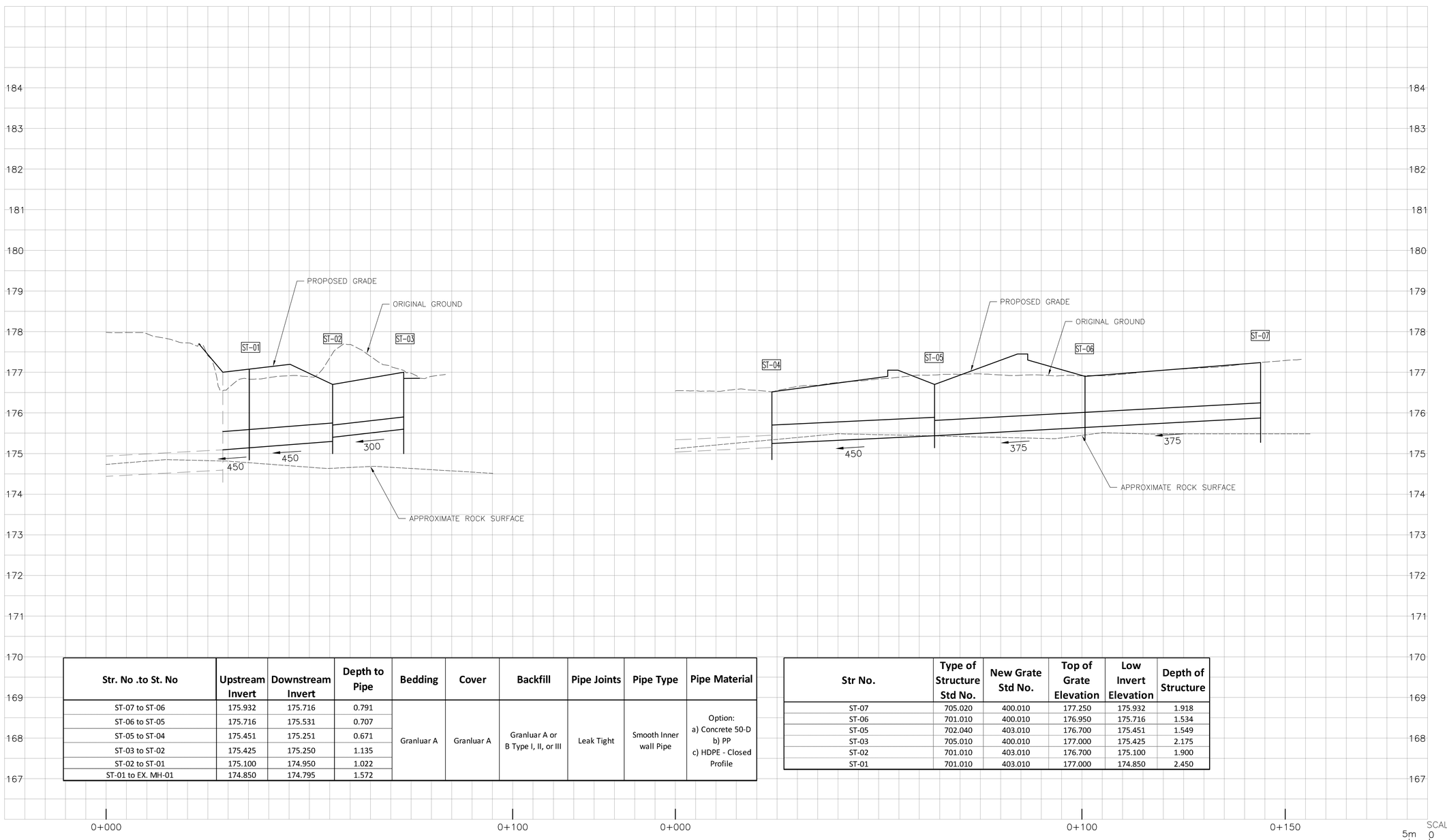

Str. No .to St. No	Upstream Invert	Downstream Invert	Depth to Pipe	Bedding	Cover	Backfill	Pipe Joints	Pipe Type	Pipe Material
ST-07 to ST-06	175.932	175.716	0.791	Granluar A	Granluar A	Granluar A or B Type I, II, or III	Leak Tight	Smooth Inner wall Pipe	Option: a) Concrete 50-D b) PP c) HDPE - Closed Profile
ST-06 to ST-05	175.716	175.531	0.707						
ST-05 to ST-04	175.451	175.251	0.671						
ST-03 to ST-02	175.425	175.250	1.135						
ST-02 to ST-01	175.100	174.950	1.022						
ST-01 to EX. MH-01	174.850	174.795	1.572						

Str No.	Type of Structure Std No.	New Grate Std No.	Top of Grate Elevation	Low Invert Elevation	Depth of Structure
ST-07	705.020	400.010	177.250	175.932	1.918
ST-06	701.010	400.010	176.950	175.716	1.534
ST-05	702.040	403.010	176.700	175.451	1.549
ST-03	705.010	400.010	177.000	175.425	2.175
ST-02	701.010	403.010	176.700	175.100	1.900
ST-01	701.010	403.010	177.000	174.850	2.450

IT IS A VIOLATION OF THE LAW FOR ANY PERSON, UNLESS ACTING UNDER THE DIRECT SUPERVISION OF A LICENSED ARCHITECT OR ENGINEER, TO ALTER AN ITEM IN ANY WAY. IF AN ITEM BEARING THE SEAL OF AN ARCHITECT OR ENGINEER IS ALTERED, THE ALTERING ARCHITECT OR ENGINEER SHALL AFFIX TO THEIR ITEM THE SEAL AND THE NOTATION "ALTERED BY" FOLLOWED BY THEIR SIGNATURE AND THE DATE OF SUCH ALTERATION AND A SPECIFIC DESCRIPTION OF THE ALTERATION.

DISCLAIMER

MARK	DESCRIPTION	DATE	APPR.
A	ISSUED FOR BID (NOT FOR CONST.)	03/21/2024	

DESIGNED BY: M. VELICEVIC
DATE: 03/21/2024
DWN BY: B.M.
CKD BY: M.V.
SOLICITATION NO.:
SUBMITTED BY: WSP CANADA
CONTRACT NO.:
FILE NAME: P:\Projects\Buffalo_Niagara_Bridge\Contracts\Contract-P-1\Drawings\Contract-P-1_V8P4-L1-1_Highway-PROFILE-Sewer-Profiles.dwg
SIZE: 22" X 34"
PLOTTED BY: B.M.
PLOT DATE: 03/21/2024

BUFFALO AND FORT ERIE PUBLIC BRIDGE AUTHORITY

WSP USA Inc.
401 Jefferson Drive
Suite 300
Buffalo, N.Y. 14202
(716) 853-1220

BUFFALO AND FORT ERIE PUBLIC BRIDGE AUTHORITY
PROJECT# PARE 3.0
SEWER PROFILES

CROSSING PATHS ★ BUILDING FUTURES
THE PEACE BRIDGE

DRAWING NUMBER
P-1

C:\pw_wrk\wsp-ca18\dms09581\20M-00635-00-P01.dwg Wed, 20 Mar 2024 - 5:24pm DeanG

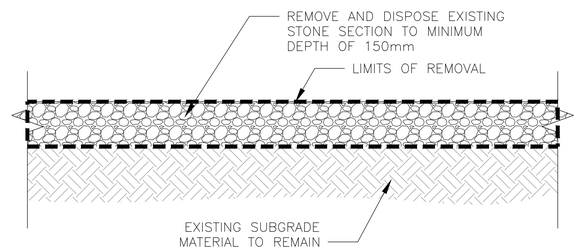

STONE SECTION REMOVAL DETAIL

1:20

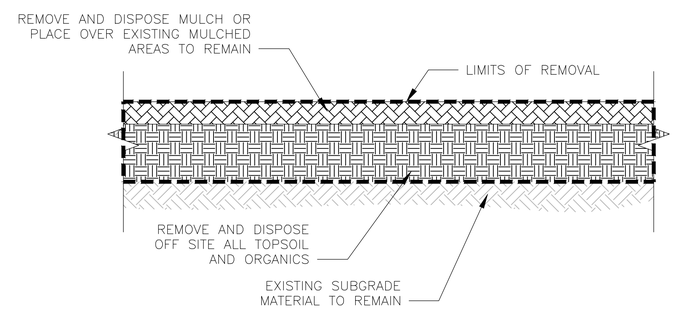

LANDSCAPED AREA REMOVAL DETAIL

1:20

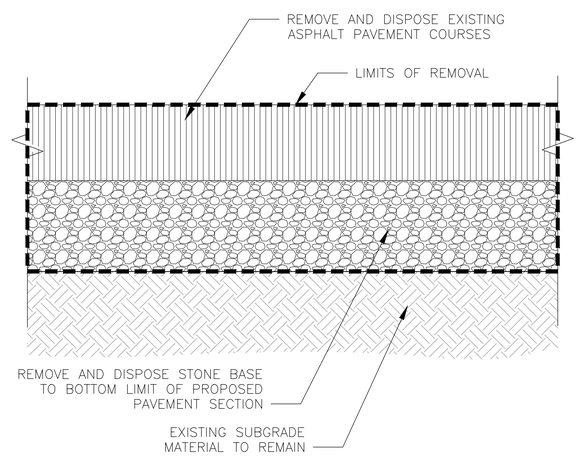

ASPHALT PAVEMENT SECTION REMOVAL DETAIL

1:20

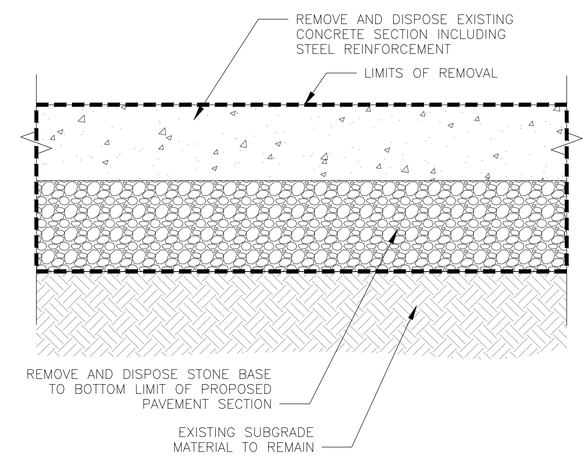

CONCRETE PAVEMENT SECTION REMOVAL DETAIL

1:20

IT IS A VIOLATION OF THE LAW FOR ANY PERSON, UNLESS ACTING UNDER THE DIRECT SUPERVISION OF A LICENSED ARCHITECT OR ENGINEER, TO ALTER AN ITEM IN ANY WAY. IF AN ITEM BEARING THE SEAL OF AN ARCHITECT OR ENGINEER IS ALTERED, THE ALTERING ARCHITECT OR ENGINEER SHALL AFFIX TO THEIR ITEM THE SEAL AND THE NOTATION "ALTERED BY" FOLLOWED BY THEIR SIGNATURE AND THE DATE OF SUCH ALTERATION AND A SPECIFIC DESCRIPTION OF THE ALTERATION.

MARK	DESCRIPTION	DATE	APPR.
A	ISSUED FOR BID (NOT FOR CONST.)	03/21/2024	

DISCLAIMER

DESIGNED BY: M. VELICEVIC
DWN BY: B.M.
CKD BY: M.V.
SUBMITTED BY: WSP CANADA
DATE: 03/21/2024
SOLICITATION NO.:
CONTRACT NO.:
FILE NAME: C:\pw_work\wsp-ca18\pms09581\20M-00635-00-T02.dwg
Design 4.1 WIPM 4.3.1 Highway\CAD\Drawings\20M-00635-00-T02
PLOTTED BY: B.M.
PLOT DATE: 03/21/2024
SIZE: 22" X 34"

BUFFALO AND FORT ERIE PUBLIC BRIDGE AUTHORITY

WSP Canada Inc.
40 Lloyd Avenue
Suite 300
Buffalo, N.Y. 14202
(716) 853-1220

BUFFALO AND FORT ERIE PUBLIC BRIDGE AUTHORITY
PROJECT# PARE 3.0
REMOVAL DETAILS

CROSSING PATHS ★ BUILDING FUTURES
THE PEACE BRIDGE

DRAWING NUMBER
T-1

C:\pw_work\wsp-ca18\pms09581\20M-00635-00-T02.dwg Thu, 21 Mar 2024 - 8:43am DeanG

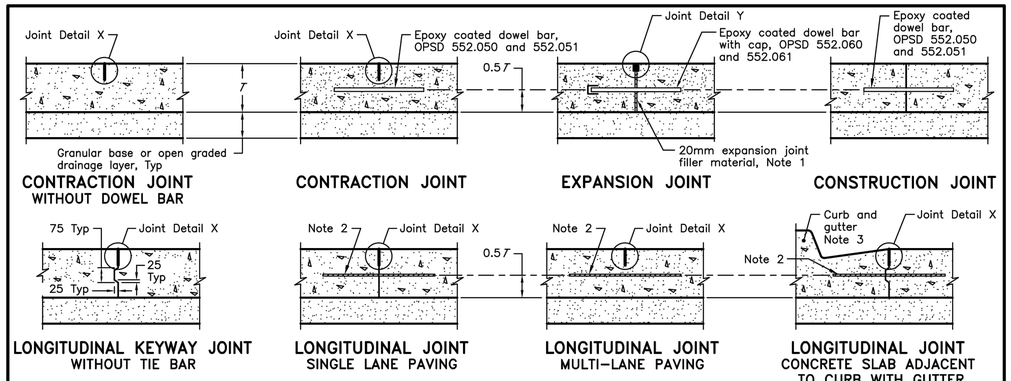

NOTES:

1 Field cut 20mm thick expansion joint filler material, the width of pavement plus shoulder and depth of concrete slab less the depth of reservoir.

2 Use 15x760mm epoxy coated deformed tie bars spaced at 600mm OC at 0.5T.

3 Depth of curb and gutter shall be extended to coincide with bottom of concrete slab.

A Paving width shall not exceed 4.5m without a longitudinal joint. Where paving width is greater than 4.5m, the longitudinal joints shall be located at the lane delineations.

B All dimensions are in millimetres unless otherwise shown.

LEGEND:

T – Concrete slab thickness

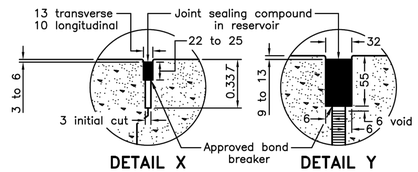

ONTARIO PROVINCIAL STANDARD DRAWING	Nov 2017	Rev 2
CONCRETE PAVEMENT JOINT DETAILS		OPSD 552.010

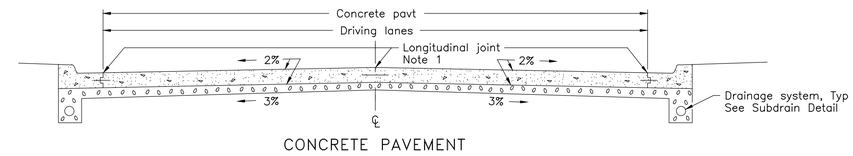

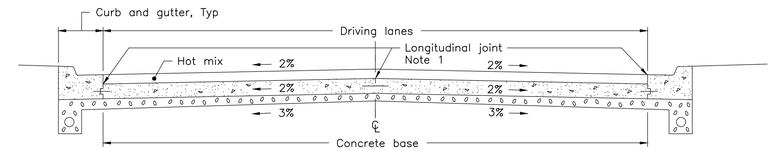

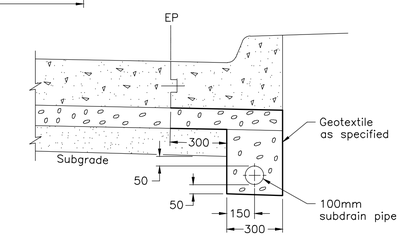

LEGEND:

Granular

Open graded drainage layer

NOTES:

1 For longitudinal joint details refer to OPSD 552.010 and 552.020.

A Drainage system outlets at every catch basin per OPSD 207.044.

B All dimensions are in millimetres unless otherwise shown.

ONTARIO PROVINCIAL STANDARD DRAWING	Nov 2016	Rev 2
CONCRETE AND COMPOSITE PAVEMENT ON OPEN GRADED DRAINAGE LAYER URBAN SECTION		OPSD 207.030

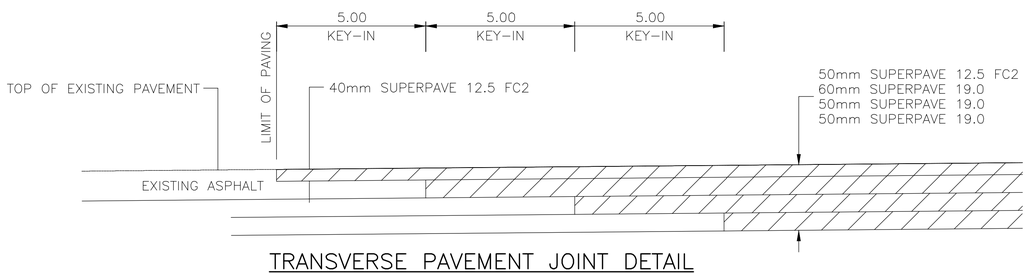

TRANSVERSE PAVEMENT JOINT DETAIL

N.T.S.

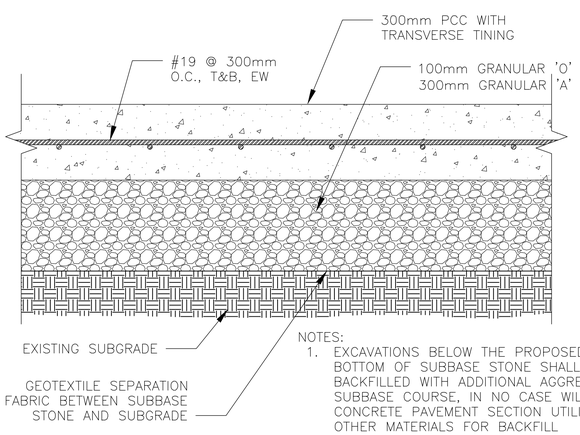

NOTES:

1. EXCAVATIONS BELOW THE PROPOSED BOTTOM OF SUBBASE STONE SHALL BE BACKFILLED WITH ADDITIONAL AGGREGATGE SUBBASE COURSE, IN NO CASE WILL CONCRETE PAVEMENT SECTION UTILIZE OTHER MATERIALS FOR BACKFILL

TYPICAL SECTION–NEW CONCRETE PAVEMENT

N.T.S.

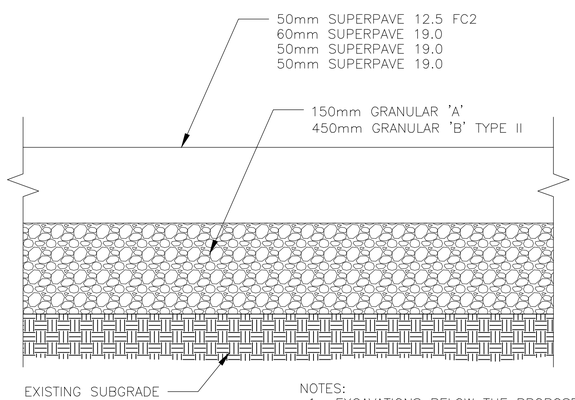

NOTES:

1. EXCAVATIONS BELOW THE PROPOSED BOTTOM OF SUBBASE STONE SHALL BE BACKFILLED WITH ADDITIONAL AGGREGATGE SUBBASE COURSE.

TYPICAL SECTION– NEW FULL DEPTH ASPHALT SECTION

N.T.S.

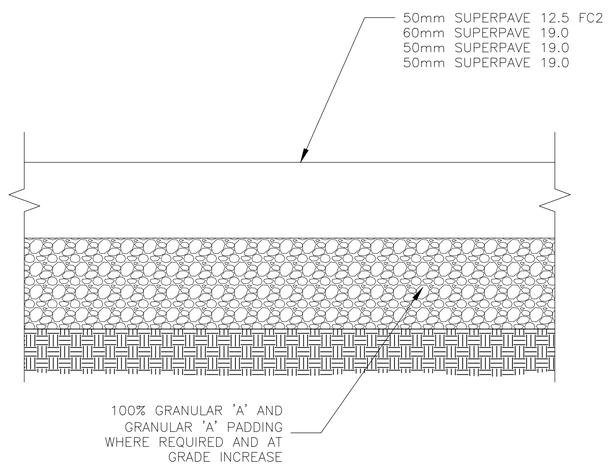

TYPICAL SECTION–ASPHALT REPLACEMENT

N.T.S.

IT IS A VIOLATION OF THE LAW FOR ANY PERSON, UNLESS ACTING UNDER THE DIRECT SUPERVISION OF A LICENSED ARCHITECT OR ENGINEER, TO ALTER AN ITEM IN ANY WAY. IF AN ITEM BEARING THE SEAL OF AN ARCHITECT OR ENGINEER IS FOUND TO BE ALTERED, ALTERING ARCHITECT OR ENGINEER SHALL AFFIX TO THEIR ITEM THE SEAL AND THE NOTATION 'ALTERED BY' FOLLOWED BY THEIR SIGNATURE AND THE DATE OF SUCH ALTERATION AND A SPECIFIC DESCRIPTION OF THE ALTERATION.

DISCLAIMER

MARK	DESCRIPTION	DATE	APPR.
A	ISSUED FOR IND NOT FOR CONSTR.	03/21/2024	

DESIGNED BY: M. VELICEVIC
DATE: 03/21/2024
DWN BY: B.M.
CKD BY: M.V.
SOLICITATION NO.:
SUBMITTED BY: WSP CANADA
CONTRACT NO.:
FILE NAME: p:\ontario-ca-buffalo-fortery-bridge\active\-85boomers\03251\2024-03-21 WP4.1.3.1_highways\CAD\Roadway\OPSD\552\552-010-103.dwg
SIZE: 22" X 34"
PLOTTED BY: B.M.
PLOT DATE: 03/21/2024

BUFFALO AND FORT ERIE PUBLIC BRIDGE AUTHORITY

WSP Q&L Inc.
401 Ellicott Street
Suite 320
Buffalo, N.Y. 14202
(716) 853-1220

BUFFALO AND FORT ERIE PUBLIC BRIDGE AUTHORITY
PROJECT# PARE 3.0
TYPICAL DETAILS

CROSSING PATHS ★ BUILDING FUTURES
THE PEACE BRIDGE

DRAWING NUMBER
T-2

C:\pw_wrk\wsp-ca18\dms09581\20M-00635-00-T03.dwg Thu, 21 Mar 2024 – 8:53am DeanG

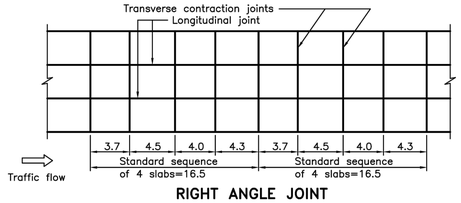

RIGHT ANGLE JOINT

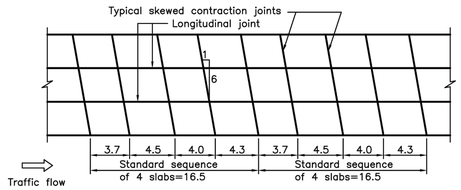

SKEWED JOINT

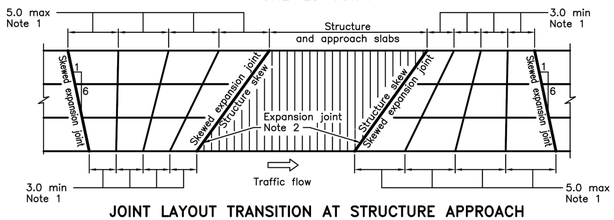

JOINT LAYOUT TRANSITION AT STRUCTURE APPROACH

NOTES:

1 The transverse joint adjacent to the skewed expansion joint shall be placed so the slab length is not shorter than 3.0m nor longer than 5.0m.
2 Expansion joints shall be placed at each end of both structure approach slabs.

A All joints shall be according to OPSD 552.010 or OPSD 552.020.
B Construction joints shall be right angled joints located a minimum of 2.0m from adjacent transverse joints.
C Transverse joints shall be extended to include the full width of the concrete shoulders and curb with gutter.
D All dimensions are in metres unless otherwise shown.

ONTARIO PROVINCIAL STANDARD DRAWING	Nov 2017	Rev 2
CONCRETE AND COMPOSITE PAVEMENT JOINT SPACING		OPSD 551.010

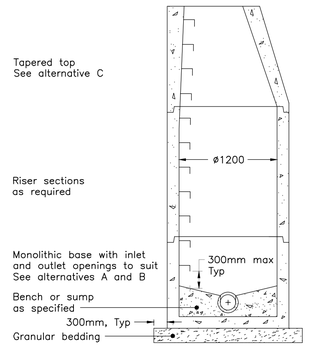

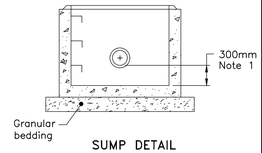

SUMP DETAIL

ALTERNATIVES

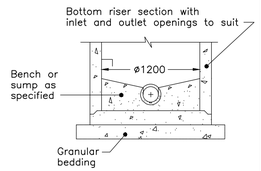

A PRECAST SLAB BASE

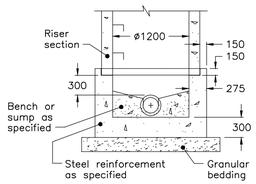

B CAST-IN-PLACE BASE

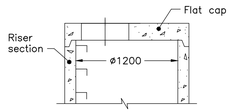

C PRECAST FLAT CAP

NOTES:

1 The sump is measured from the lowest invert.

A Granular backfill shall be placed to a minimum thickness of 300mm all around the maintenance hole.
B Precast concrete components shall be according to OPSD 701.030, 701.031, or 701.032.
C Structure exceeding 5.0m in depth shall include safety platform according to OPSD 404.020.
D Pipe support according to OPSD 708.020.
E For benching and pipe opening details, see OPSD 701.021.
F For adjustment unit and frame installation, see OPSD 704.010.
G All dimensions are nominal.
H All dimensions are in millimetres unless otherwise shown.

ONTARIO PROVINCIAL STANDARD DRAWING	Nov 2014	Rev 5
PRECAST CONCRETE MAINTENANCE HOLE 1200mm DIAMETER		OPSD 701.010

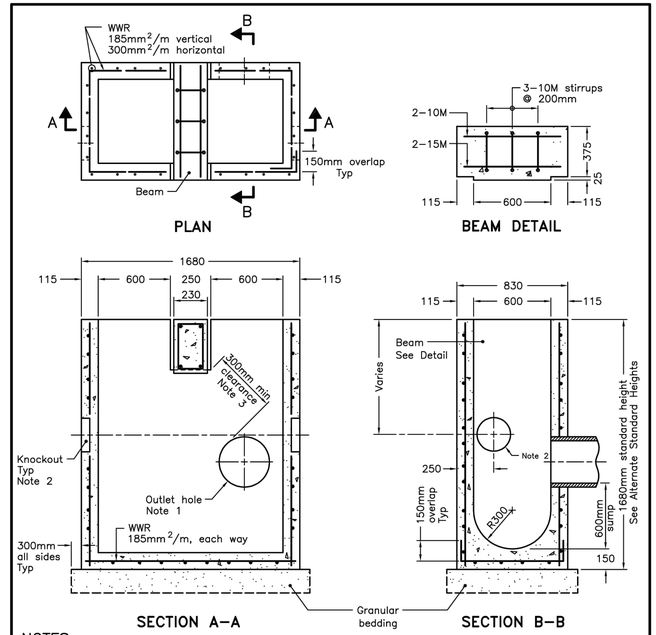

NOTES:

1 Outlet hole size 525mm diameter maximum, location as required.
2 200mm diameter knockout to accommodate subdrain. Knockout shall be 60mm deep.
3 Minimum clearance between beam recess and hole for pipe shall be 300mm or minimum clearance can be 150mm with addition of two 15M size rebar on 45 degree diagonal.

A Centre reinforcing in base slab and walls ±20mm.
B Granular backfill shall be placed to a minimum thickness of 300mm all around the catch basin.
C Frame, grate, and adjustment units shall be installed according to OPSD 704.010.
D Pipe support shall be according to OPSD 708.020.
E All dimensions are nominal.
F All dimensions are in millimetres unless otherwise shown.

ALTERNATE STANDARD HEIGHTS	
ALTERNATIVE	DIMENSION
A	1980
B	1830
C	1680

ONTARIO PROVINCIAL STANDARD DRAWING	Nov 2019	Rev 4
PRECAST CONCRETE TWIN INLET CATCH BASIN 600 x 1450mm		OPSD 705.020

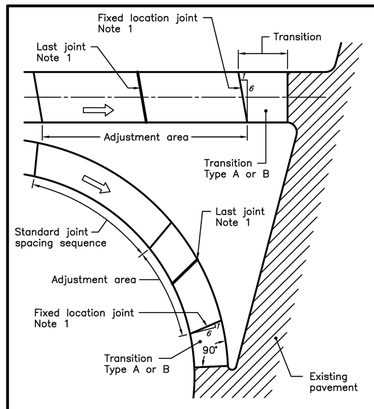

PLAN

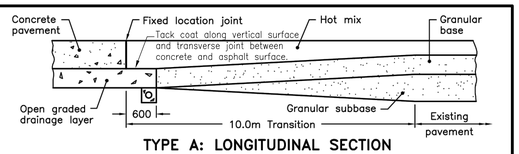

TYPE A: LONGITUDINAL SECTION
CONCRETE PAVEMENT TO HOT MIX PAVEMENT WITH GRANULAR BASE

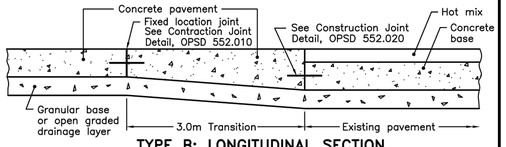

TYPE B: LONGITUDINAL SECTION
CONCRETE PAVEMENT TO COMPOSITE PAVEMENT

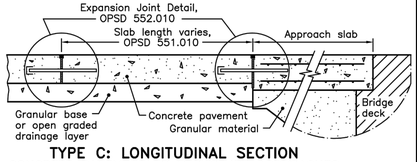

TYPE C: LONGITUDINAL SECTION
CONCRETE PAVEMENT TO STRUCTURE APPROACHES

NOTES:

1 Adjust the position of the last joint immediately previous to the fixed location joint, so that the slabs on each side of this last joint are not shorter than 3.0m, nor longer than 5.0m. Last joint shall be an expansion joint for Type B section.

A When base is open graded drainage layer, a minimum 100mm of Granular A material is required beneath it.
B For Type C details of approach slab see structural drawing(s).
C All dimensions are in millimetres unless otherwise shown.

ONTARIO PROVINCIAL STANDARD DRAWING	Nov 2017	Rev 2
CONCRETE PAVEMENT APPROACH TREATMENT TO HOT MIX AND COMPOSITE PAVEMENTS AND STRUCTURE APPROACHES		OPSD 555.010M

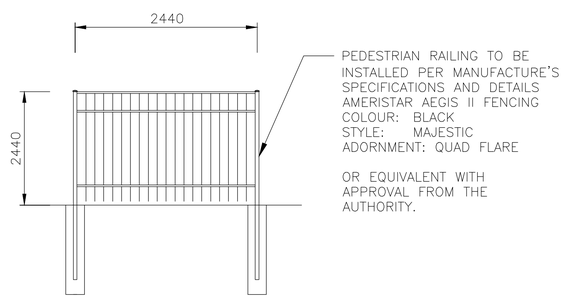

FN-01 PERIMETER FENCING DETAIL

N.T.S.

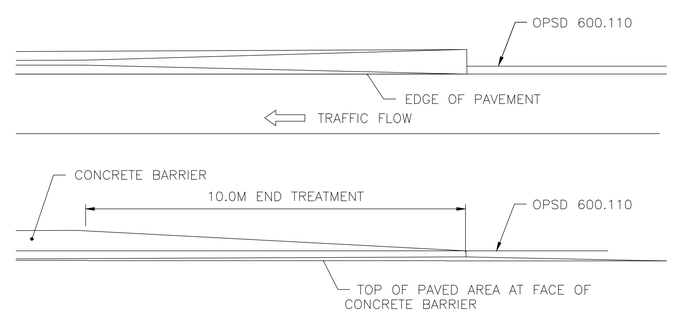

DTL-100

N.T.S.

IT IS A VIOLATION OF THE LAW FOR ANY PERSON, UNLESS ACTING UNDER THE DIRECT SUPERVISION OF A LICENSED ARCHITECT OR ENGINEER, TO ALTER AN ITEM IN ANY WAY. IF AN ITEM BEARING THE SEAL AND THE NOTATION "ALTERED BY" FOLLOWED BY THEIR SIGNATURE AND DISTINCTIVE STAMP IS ATTACHED, THE ALTERING ARCHITECT OR ENGINEER SHALL AFFIX TO THEIR ITEM THE SEAL AND THE NOTATION "ALTERED BY" FOLLOWED BY THEIR SIGNATURE AND DISTINCTIVE STAMP AND ADD A DESCRIPTION OF THE ALTERATION.

MARK	DESCRIPTION	DATE	APPR
A	ISSUED FOR BID (NOT FOR CONST.)	03/21/2024	

DISCLAIMER

DESIGNED BY: M. VELICEVIC
DWN BY: B.M.
CKD BY: M.V.
SUBMITTED BY: WSP CANADA
FILE NAME: C:\pw_wrk\wsp-ca18\pms09581\20M-00635-00-T04.dwg
DATE: 03/21/2024
SOLICITATION NO.:
CONTRACT NO.:
SIZE: 22" X 34"
PLOTTED BY: B.M.
PLOTTED ON: 03/21/2024

BUFFALO AND FORT ERIE PUBLIC BRIDGE AUTHORITY

WSP Canada Inc.
40 Lavelle Drive
Suite 300
Buffalo, N.Y. 14202
(716) 853-1220

BUFFALO AND FORT ERIE PUBLIC BRIDGE AUTHORITY
PROJECT# PARE 3.0
TYPICAL DETAILS

CROSSING PATHS ★ BUILDING FUTURES
THE PEACE BRIDGE

DRAWING NUMBER
T-3

C:\pw_wrk\wsp-ca18\pms09581\20M-00635-00-T04.dwg Thu, 21 Mar 2024 - 9:07am DesinG

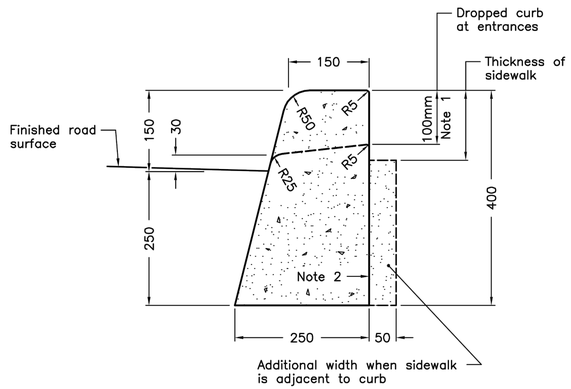

NOTES:

1 When sidewalk is continuously adjacent, the dropped curb at entrances shall be reduced to 75mm.
2 For slipforming procedure a 5% batter is acceptable.
A Treatment at entrances shall be according to OPSD 351.010.
B Outlet treatment shall be according to the OPSD 610 Series.
C The transition from one curb type to another shall be a minimum length of 3.0m, except in conjunction with guide rail where it shall be according to the OPSD 900 Series.
D All dimensions are in millimetres unless otherwise shown.

ONTARIO PROVINCIAL STANDARD DRAWING	Nov 2012	Rev 2
CONCRETE BARRIER CURB	OPSD 600.110	

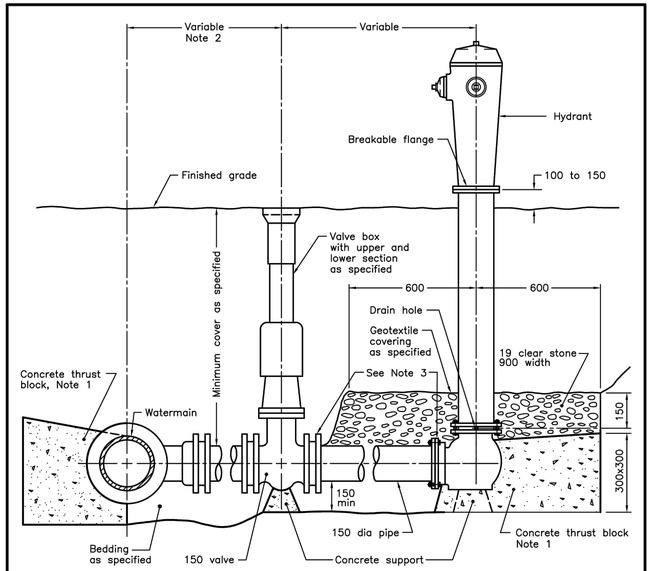

NOTES:

1 All concrete thrust blocks shall be poured against undisturbed ground.
2 When specified, for watermains 400mm and less, locate valve within 1.0m of centreline of watermain. Retaining and restraining devices shall be utilized. For watermains 600mm and over, bolt valve with flanged end directly to flanged tee.
3 Retaining and restraining devices shall be as specified.
A Bond breaker shall be used between the concrete and the fittings and appurtenances.
B Bolts and nuts for buried flange to flange connections shall be stainless steel.
C When required, flange of standpipe extensions shall not be in frost zone.
D This OPSD shall be read in conjunction with OPSD 1103.010 and 1103.020.
E Backfill material within 500mm of service box shall be native or imported, as specified.
F Tracer wire shall be installed as specified.
G All dimensions are in millimetres unless otherwise shown.

ONTARIO PROVINCIAL STANDARD DRAWING	Nov 2018	Rev 3
HYDRANT INSTALLATION	OPSD 1105.010	

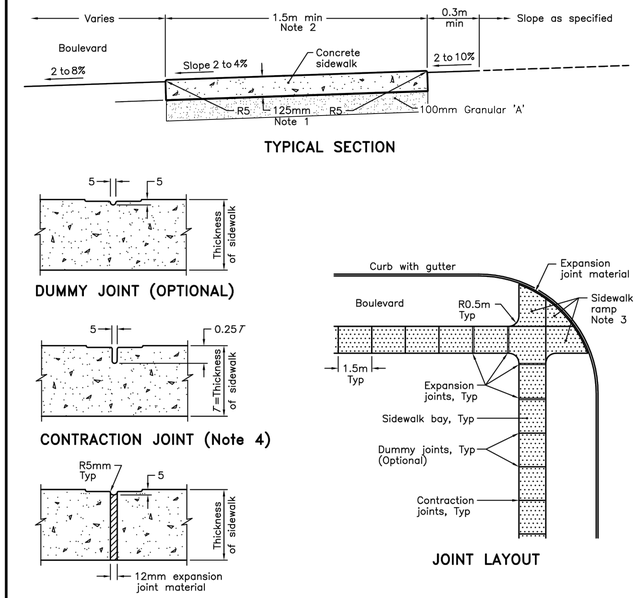

NOTES:

1 Sidewalk thickness at residential driveways and adjacent to curb shall be 150mm. At commercial and industrial driveways, the thickness shall be 200mm.
2 Sidewalk width shall be wider when specified.
3 This OPSD shall be read in conjunction with OPSD 310.030, 310.031, 310.033, and 310.039.
4 Contraction Joint may be tooled or sawcut.
A All dimensions are in millimetres unless otherwise shown.

ONTARIO PROVINCIAL STANDARD DRAWING	Nov 2019	Rev 3
CONCRETE SIDEWALK	OPSD 310.010M	

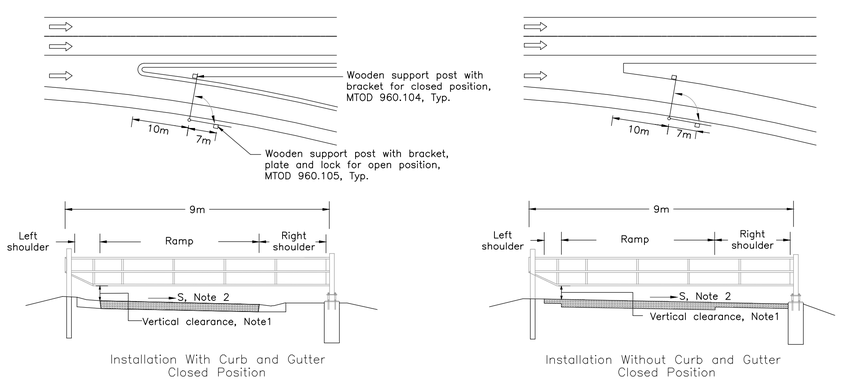

NOTES:

1 Vertical clearance at left edge of driving lane shall be 0.2m to 0.3m
2 Superelevation rate 2.0% to 6.0% as specified.
A This drawing shall be read in conjunction with MTOD 960.101
B Gate may be installed in front of guide rail when specified.
C All dimensions are in millimetres unless otherwise shown

MINISTRY OF TRANSPORTATION ONTARIO DRAWING	May 2013	Rev 0
RAMP CLOSURE GATE ENTRANCE RAMP TO FREEWAY 9m GATE – INSTALLATION	MTOD – 960.010	

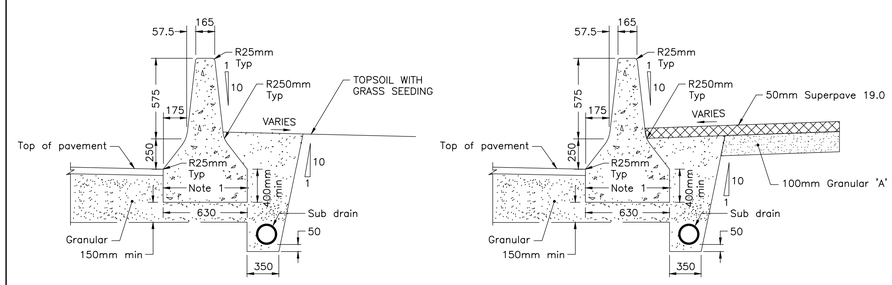

NOTES:

1 For slipforming procedure, a 1H:20V batter is acceptable.
A All dimensions are in millimetres unless otherwise shown.

ONTARIO PROVINCIAL STANDARD DRAWING	Nov 2015	Rev 0
GUIDE RAIL SYSTEM, CONCRETE ROADSIDE BARRIER CAST–IN–PLACE OR SLIPFORMED INSTALLATION	OPSD 911.135M	

IT IS A VIOLATION OF THE LAW FOR ANY PERSON, UNLESS ACTING UNDER THE DIRECT SUPERVISION OF A LICENSED ARCHITECT OR ENGINEER, TO ALTER AN ITEM IN ANY WAY. IF AN ITEM BEARING THE SEAL OF AN ARCHITECT OR ENGINEER IS ALTERED, THE ALTERING ARCHITECT OR ENGINEER SHALL AFFIX TO THEIR ITEM THE SEAL AND THE NOTATION 'ALTERED BY' FOLLOWED BY THEIR SIGNATURE AND THE DATE OF SUCH ALTERATION AND A SPECIFIC DESCRIPTION OF THE ALTERATION.

MARK	DESCRIPTION	DATE	APPR.
A	ISSUED FOR BID (NOT FOR CONST.)	03/21/2024	

DISCLAIMER

DESIGNED BY: M. VELICEVIC
DWN BY: B.M.
CKD BY: M.V.
SUBMITTED BY: WSP CANADA
DATE: 03/21/2024
SOLICITATION NO.:
CONTRACT NO.:
FILE NAME: pw_wsp-ca18_dms09581_00635-00-T04.dwg
Plot date: Thursday, March 21, 2024
Plotted by: B.M.
SIZE: 22" X 34"
PLOT DATE: 03/21/2024

BUFFALO AND FORT ERIE PUBLIC BRIDGE AUTHORITY

WSP Canada Inc.
401 Bellevue Drive
Suite 300
Fort Erie, ON L2A 5E7
(716) 853-1220

BUFFALO AND FORT ERIE PUBLIC BRIDGE AUTHORITY
PROJECT# PARE 3.0
TYPICAL DETAILS

CROSSING PATHS ★ BUILDING FUTURES
THE PEACE BRIDGE

DRAWING NUMBER
T-4

C:\pw_work\wsp-ca18\dms09581\20M-00635-00-T05.dwg Thu, 21 Mar 2024 - 9:24am DeanG

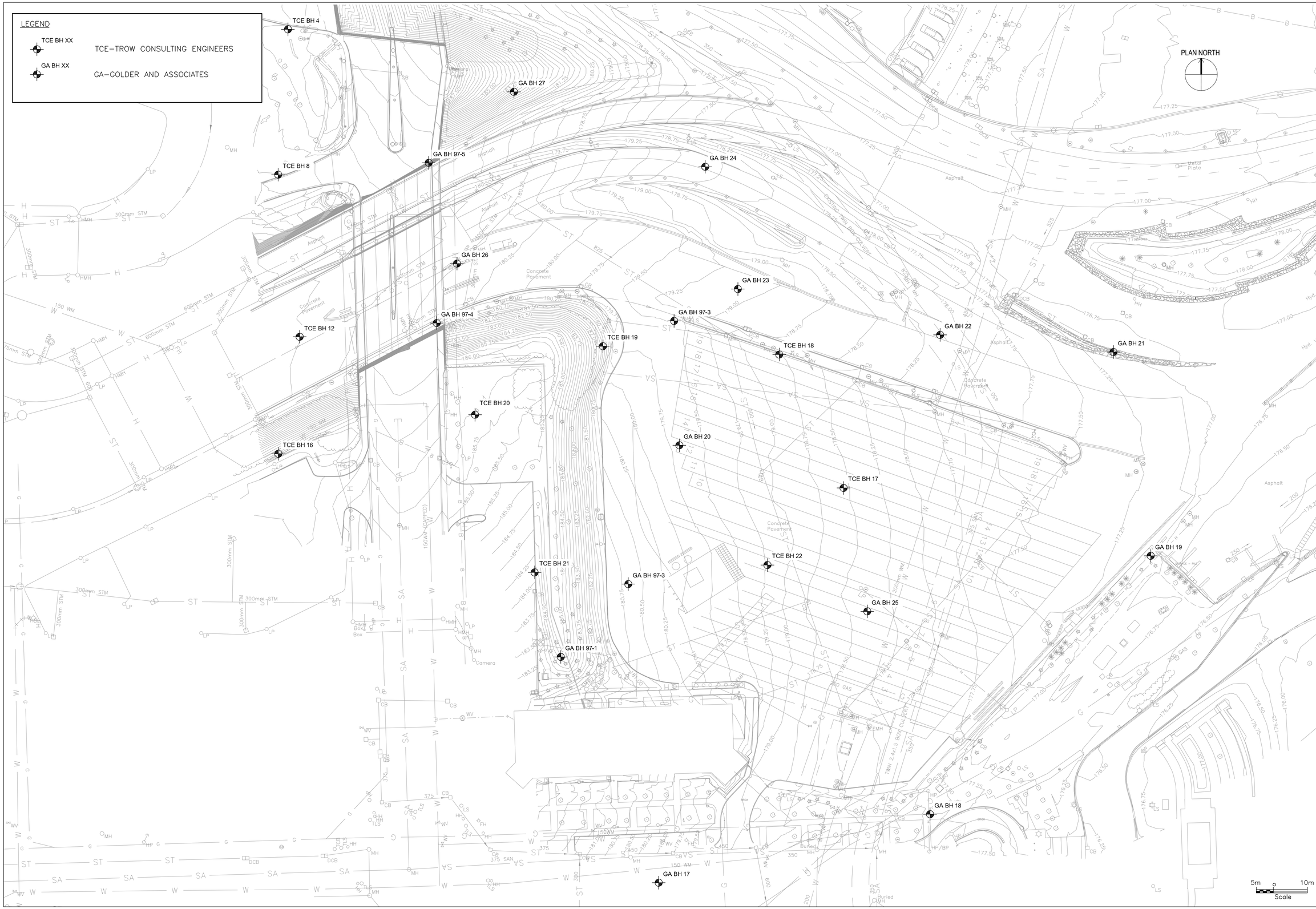

IT IS A VIOLATION OF THE LAW FOR ANY PERSON, UNLESS ACTING UNDER THE DIRECT SUPERVISION OF A LICENSED ARCHITECT OR ENGINEER, TO ALTER AN ITEM IN ANY WAY. IF AN ITEM BEARING THE SEAL AND THE NOTATION "ALTERED BY" FOLLOWED BY THEIR ALTERING ARCHITECT OR ENGINEER SHALL AFFIX TO THEIR ITEM THE SEAL AND THE NOTATION "ALTERED BY" FOLLOWED BY THEIR SIGNATURE AND THE DATE OF SUCH ALTERATION AND A SPECIFIC DESCRIPTION OF THE ALTERATION.

DISCLAIMER

MARK	DESCRIPTION	DATE	APPR.
A	ISSUED FOR BID (NOT FOR CONST.)	03/21/2024	

DESIGNED BY: M. VELICEVIC
DWN BY: B.M.
CKD BY: M.V.
SUBMITTED BY: WSP CANADA
FILE NAME: P:\Projects\Active\Buffalo-Fort Erie PublicBridge_common\Cad_Drawings\Borehole Plan\20M-00635-00-B02.dwg
Xrefs: L-1.1, WPH-L-1.1, Highways-PLOT-PLAN-TEMPLATE-00-00-00-0-0-A002
Plotted: Thu, 21 Mar 2024 9:15am DeanG
DATE: 03/21/2024
SOLICITATION NO.:
CONTRACT NO.:
PLOTTED BY: B.M.
SIZE: 22"X 34"
DATE: 03/21/2024

BUFFALO AND FORT ERIE PUBLIC BRIDGE AUTHORITY

wsp
WSP, QS Inc.
40 Lafayette Drive
Suite 300, 14202
Buffalo, NY
(716) 853-1220

BUFFALO AND FORT ERIE PUBLIC BRIDGE AUTHORITY
PROJECT# PARE 3.0
BOREHOLE PLAN

CROSSING PATHS ★ BUILDING FUTURES
THE PEACE BRIDGE

DRAWING NUMBER
B-1

C:\pw_wrk\wsp-ca18\dms09581\20M-00635-00-B02.dwg Thu, 21 Mar 2024 - 9:15am DeanG

Trow Consulting Engineers Ltd. (TCE) 1994

TCE BH 04 Elev=186.01

0 – 300 Topsoil: Dark Brown, silt, organics

300 – 600 Fill: Dark brown, clayey silt, moist

600 – 5050 Silty Clay Till: brown, trace sand, trace to some gravel, scattered wet sand seams and boulders, moist, very stiff to hard

End of Borehole Elev=180.96

TCE BH 08 Elev=185.81

0 – 250 Topsoil: Dark Brown, silt, organics

250 – 1050 Fill: dark brown, silty clay, moist (possible native)

1050 – 6550 Silty Clay Till, brown, trace sand, trace to some gravel, scattered wet sand seams and boulders, moist, organic inclusions in the upper 1.0m, stiff to hard

End of Borehole Elev=179.26

TCE BH 12 Elev=186.28

0 – 250 Topsoil: Dark Brown, silt, organics

250 – 1850 Fill: dark brown, silty clay, trace organic topsoil inclusions, moist

End of Borehole (Obstruction) Elev=184.43

TCE BH 16 Elev=185.94

0 – 450 Topsoil: dark brown, silt, organics

450 – 5050 Silty clay till: brown, trace sand, trace to some gravel, scattered wet sand seams and cobbles, moist, very stiff to hard

End of Borehole Elev=180.89

TCE BH 17 Elev=177.43

0 – 150 Topsoil: dark brown, silt, organic

150 – 1750 Fill: dark brown to brown, silty clay with organic topsoil inclusions, moist

End of Borehole (Bedrock) ELev=175.68

TCE BH 18 Elev=181.96

0 – 200 Topsoil: dark brown, silt, organics

200 – 1500 Fill: dark brown, silty clay with decayed wood pieces and organic topsoil inclusions moist

1500 – 5050 Silty clay till: brown, trace sand, trace to some gravel, scattered wet sand seams and cobbles, moist, very stiff to hard

End of Borehole Elev=176.91

TCE BH 19 Elev=184.23

0 – 200 Pavement 50mm Asphaltic Concrete, 150mm crushed Stone

200 – 6950 Silty clay till: brown, trace sand, trace to some gravel, scattered wet sand seams and cobbles, moist, very stiff to hard

End of Borehole (Bedrock) Elev=177.28

TCE BH 20 Elev=185.44

0 – 350 Pavement 50mm Asphaltic Concrete, 330mm Crushed Stone

350 – 5050 Silty clay till: brown, trace sand, trace to some gravel, scattered wet sand seams and cobbles , moist, hard

End of Borehole Elev=180.39

TCE BH 21 Elev=184.55

0 – 300 Pavement: 50mm Asphaltic 250mm Crushed Stone

300 – 5050 Silty Clay Till: brown, tracesand, trace to some gravel, scattered wet sand seams and cobbles, moist, very stiff to hard

End of Borehole Elev=179.50

TCE BH 22 Elev=178.75

0 – 200 Pavement: 50mm Asphaltic Concrete, 150mm Crushed Stone

200 – 3050 Fill: dark brown, silty clay with numerous topsoil inclusions, moist

End of Borehole Elev=175.70

Golder Associates 94–97

GA BH 27 Elev=183.43

0 – 200 Topsoil

200 – 2900 Stiff to hard, brown, Silty Clay: Trace sand, occasional gravel (Till)

2900 – 3810 Firm, brown, Silty Clay

End of Borehole Elev=179.62

GA BH 97–5 Elev=187.97

0 – 100 Asphalt

100 – 610 Frozen sand and gravel (Granular 'A' Fill)

610 – 3350 Siff, dry, reddish brown clayey silt with organics (Fill)

3350 – 7240 Hard, dry, brown Silty Clay, some sand and gravel (Till)

7240 – 1067 Stiff, moist, greyish brown Silty Clay, trace to some sand with occasional grey silty sand seams

End of Borehole (Refusal) Elev=177.30

GA BH 97–4 Elev=186.74

0 – 100 Asphalt

100 – 2210 Very Stiff, brownish grey silty clay with organics (Fill)

2210 – 5640 Hard, greyish to brown Silty Clay, some sand and gravel (Till)

5640 – 9100 Stiff, moist, greyish brown Silty Clay, trace to some sand with occasional grey silt seams

9100 – 9850 Firm moist, brownish grey Clayey Silt, some sand and gravel (Till)

End of Borehole (refusal) Elev=176.89

GA BH 97–1 Elev=184.50

0 – 100 Asphalt

100 – 150 Sand and gravel (Fill)

150 – 1450 Frozen, dry, weathered, brownish red Clayey Silt, some sand and gravel (Till)

1450 – 3730 Very stiff to hard, dry, brownish red Silty Clay, some sand and gravel (Till)

3730 – 4570 Stiff, moist brownish red Silty Clay, some sand and gravel (Till)

4570 – 7470 Firm, moist, brownish red Silty Clay, trace to some sand, occasional gravel

7470 – 7920 Stiff, moist, grey sandy Silt, some clay and gravel

End of Borehole (Refusal) Elev=176.56

GA BH 17 Elev=179.83

0 – 100 Asphalt

100 – 800 Brown, Silty Sand and Gravel (Fill)

800 – 3680 Firm to hard, Silty Clay to Clayey Silt, trace to some sand, pieces of timber and ceramics

End of Borehole (Poss. Bedrock) Elev=175.97

GA BH 18 Elev=177.24

0 – 100 Asphalt

100 – 1300 Very dense, brown, Sand and Gravel (Probably Fill)

1300 – 2400 Dense, brown, Sand and Gravel

2400 – 2740 Stiff brown, Silty Clay; trace sand, occasional gravel (Till)

End of Borehole (Prob. Bedrock) Elev=174.50

GA BH 19 Elev=176.37

0 – 100 Asphalt

200 – 600 Granular Road Base (Fill)

600 – 1730 Compact, Brown, Fine to medium Sand, occasional gravel

End of Borehole (Prob. Bedrock) Elev=174.64

GA BH 20 Elev=182.59

0 – 5940 Stiff to hard, brown Silty Clay; trace sand occasional gravel (Till)

5940 – 6480 Very stiff, grey, Clayey Silt, trace sand, occasional gravel (Till)

6480 – 7320 Very stiff, brown, Silty Clay

End of Borehole Elev=175.27

GA BH 21 Elev=176.71

0 – 100 Asphalt

100 – 600 Granular Road Base (Fill)

600 – 1370 Loose, brown, fine to medium, Sand; trace silt

End of Borehole (Prob. Bedrock) Elev=175.34

GA BH 22 Elev=176.61

0 – 100 Asphalt

100 – 430 Granular Road Base (Fill)

430 – 840 Brown, Silty Sand; trace clay (Fill)

End of Borehole (refusal) Elev=175.77

GA BH 23 Elev=181.54

0 – 500 Stiff, brown, Silty Clay; some topsoil, gravel (Fill)

500 – 3510 Very stiff to hard, brown, Silty Clay; trace sand occasional gravel (Till)

End of Borehole Elev=178.05

GA BH 24 Elev=182.56

0 – 300 Topsoil

300 – 4270 Firm to very stiff, brown becoming grey at about elev 179.56m, Silty Clay; trace sand, occasional gravel (Till)

End of Borehole Elev=178.29

GA BH 25 Elev=176.72

0 – 100 Asphalt

100 – 450 Granular Road Base (Fill)

450 – 1600 Loose, dark brown, Silty Sand; some gravel (Fill)

End of Borehole (Prob. Bedrock) Elev=175.12

GA BH 26 Elev=186.42

0 – 200 Topsoil

200 – 2900 Stiff to very stiff, brown Silty Clay; trace sand, occasional gravel, trace organics (Fill)
2900 – 5030 Hard, brown, Silty Clay; trace sand, occasional gravel (Till)

End of Borehole Elev=181.39

GA BH 27 Elev=183.43

0 – 200 Topsoil

200 – 2900 Stiff to hard, brown, Silty Clay; trace sand, occasional gravel (Till)

2900 – 3810 Firm, brown, Silty Clay

End of Borehole Elev=179.62

IT IS A VIOLATION OF THE LAW FOR ANY PERSON, UNLESS ACTING UNDER THE DIRECT SUPERVISION OF A LICENSED ARCHITECT OR ENGINEER, TO ALTER AN ITEM IN ANY WAY. IF AN ITEM BEARING THE SEAL OF AN ARCHITECT OR ENGINEER IS ALTERED, THE ALTERING ARCHITECT OR ENGINEER SHALL AFFIX TO THEIR ITEM THE SEAL AND THE NOTATION "ALTERED BY" FOLLOWED BY THEIR SIGNATURE AND THE DATE OF SUCH ALTERATION AND A SPECIFIC DESCRIPTION OF THE ALTERATION.

MARK	DESCRIPTION	DATE	APPR.
A	ISSUED FOR BID (NOT FOR CONST.)	03/21/2024	

DISCLAIMER

DESIGNED BY: M. VELICEVIC
DATE: 03/21/2024
DWN BY: B.M.
CKD BY: M.V.
SOLICITATION NO.:
SUBMITTED BY: WSP CANADA
CONTRACT NO.:
FILE NAME: p:\ca0001xx\ca0001ge\contracts\ca0001ge0020\drawings\02-Design\11-WP4-L1-1_Highway\CA0001ge0020_B-B001.dwg
PLOTTED BY: B.M.
PLOT DATE: 03/21/2024
SIZE: 22" X 34"

BUFFALO AND FORT ERIE PUBLIC BRIDGE AUTHORITY

WSP USA Inc.
401 Wehrle Drive
Suite 320
Buffalo, N.Y. 14202
(716) 853-1220

BUFFALO AND FORT ERIE PUBLIC BRIDGE AUTHORITY
PROJECT# PARE 3.0
BOREHOLE DATA

CROSSING BETWEEN BUILDING FUTURES
THE PEACE BRIDGE

DRAWING NUMBER
B-2

C:\pw_wrk\wsp-ca18\dms09581\20M-00635-00-B01.dwg Thu, 21 Mar 2024 – 9:17am DeanG

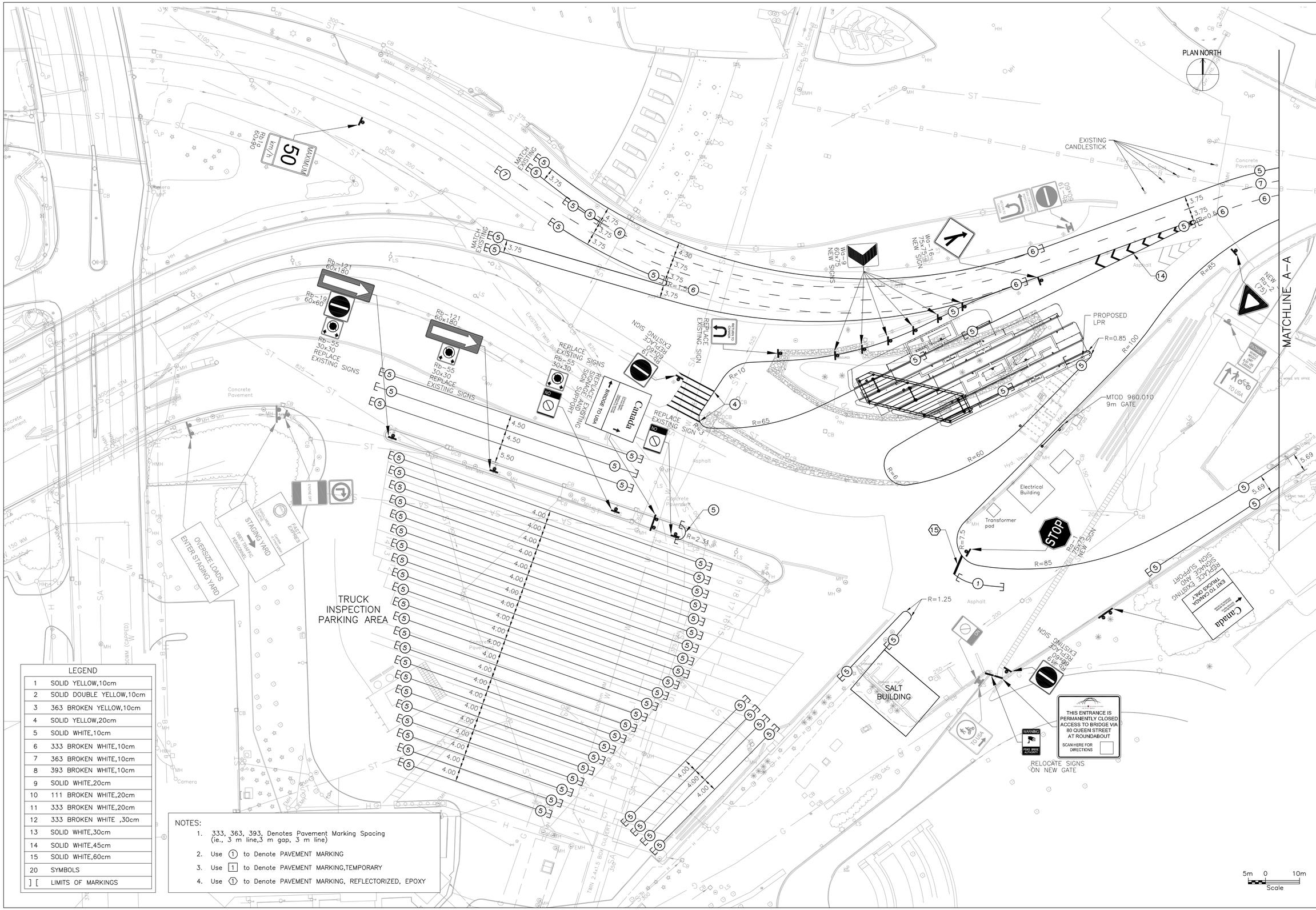

LEGEND

1	SOLID YELLOW,10cm
2	SOLID DOUBLE YELLOW,10cm
3	363 BROKEN YELLOW,10cm
4	SOLID YELLOW,20cm
5	SOLID WHITE,10cm
6	333 BROKEN WHITE,10cm
7	363 BROKEN WHITE,10cm
8	393 BROKEN WHITE,10cm
9	SOLID WHITE,20cm
10	111 BROKEN WHITE,20cm
11	333 BROKEN WHITE,20cm
12	333 BROKEN WHITE ,30cm
13	SOLID WHITE,30cm
14	SOLID WHITE,45cm
15	SOLID WHITE,60cm
20	SYMBOLS
] [	LIMITS OF MARKINGS

NOTES:

1. 333, 363, 393, Denotes Pavement Marking Spacing (ie., 3 m line,3 m gap, 3 m line)
2. Use (1) to Denote PAVEMENT MARKING
3. Use [1] to Denote PAVEMENT MARKING,TEMPORARY
4. Use ⟨1⟩ to Denote PAVEMENT MARKING, REFLECTORIZED, EPOXY

MARK	DESCRIPTION	DATE	APPR.
A	ISSUED FOR BID (NOT FOR CONST.)	03/21/2024	

IT IS A VIOLATION OF THE LAW FOR ANY PERSON, UNLESS ACTING UNDER THE DIRECT SUPERVISION OF A LICENSED ARCHITECT OR ENGINEER, TO ALTER AN ITEM IN ANY WAY. IF AN ITEM BEARING THE SEAL OF AN ARCHITECT OR ENGINEER IS ALTERED, THE ALTERING ARCHITECT OR ENGINEER SHALL AFFIX TO THEIR ITEM THE SEAL AND THE NOTATION "ALTERED BY" FOLLOWED BY THEIR SIGNATURE AND THE DATE OF SUCH ALTERATION AND A SPECIFIC DESCRIPTION OF THE ALTERATION.

DISCLAIMER

DESIGNED BY: M. VELICEVIC
DWN BY: B.M.
CKD BY: M.V.
SUBMITTED BY: WSP CANADA
FILE NAME: P:\Projects\Active\Buffalo-Fort-Erie-Public-Bridge\Documents\DGN\Drawings\Contract\M-1 Pavement Markings.dgn
Drawing: L-1, MPVI, L-1, L-1 Alignment, PLOT SCALE: 1:500(ISO-GA4B1)
SIZE: 22" X 34"
PLOTTED BY: B.M.
DATE: 03/21/2024
SOLICITATION NO.:
CONTRACT NO.:
DATE: 03/21/2024

BUFFALO AND FORT ERIE PUBLIC BRIDGE AUTHORITY

WSP, GB, Inc.
40 Lothlorien Drive
Buffalo, N.Y. 14202
(716) 853-1220

BUFFALO AND FORT ERIE PUBLIC BRIDGE AUTHORITY
PROJECT# PARE 3.0
PAVEMENT MARKINGS

CROSSING PATHS ★ BUILDING FUTURES
THE PEACE BRIDGE

DRAWING NUMBER
M-1

C:\pw_work\wsp-ca18\dms09581\20M-00635-00-M01.dwg Thu, 21 Mar 2024 - 9:20am DeanG

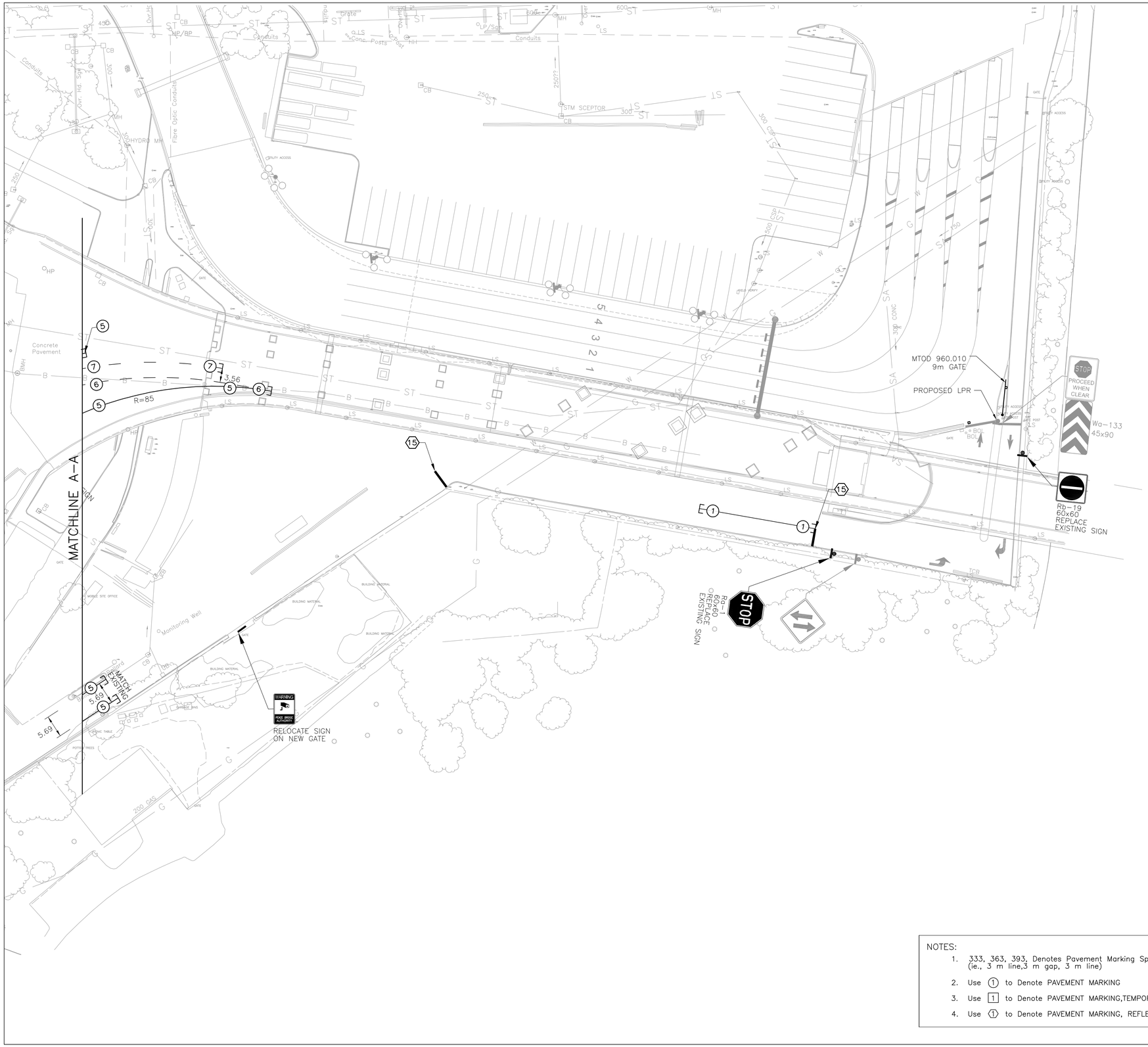

PLAN NORTH

LEGEND	
1	SOLID YELLOW,10cm
2	SOLID DOUBLE YELLOW,10cm
3	363 BROKEN YELLOW,10cm
4	SOLID YELLOW,20cm
5	SOLID WHITE,10cm
6	333 BROKEN WHITE,10cm
7	363 BROKEN WHITE,10cm
8	393 BROKEN WHITE,10cm
9	SOLID WHITE,20cm
10	111 BROKEN WHITE,20cm
11	333 BROKEN WHITE,20cm
12	333 BROKEN WHITE ,30cm
13	SOLID WHITE,30cm
14	SOLID WHITE,45cm
15	SOLID WHITE,60cm
20	SYMBOLS
] [	LIMITS OF MARKINGS

NOTES:

1. 333, 363, 393, Denotes Pavement Marking Spacing (ie., 3 m line,3 m gap, 3 m line)
2. Use (1) to Denote PAVEMENT MARKING
3. Use [1] to Denote PAVEMENT MARKING,TEMPORARY
4. Use ⟨1⟩ to Denote PAVEMENT MARKING, REFLECTORIZED, EPOXY

5m 0 10m
Scale

IT IS A VIOLATION OF THE LAW FOR ANY PERSON, UNLESS ACTING UNDER THE DIRECT SUPERVISION OF A LICENSED ARCHITECT OR ENGINEER, TO ALTER AN ITEM IN ANY WAY. IF AN ITEM BEARING THE SEAL OF AN ARCHITECT OR ENGINEER IS ALTERED, THE ALTERING ARCHITECT OR ENGINEER SHALL AFFIX TO THEIR ITEM THE SEAL AND THE NOTATION "ALTERED BY" FOLLOWED BY THEIR SIGNATURE AND THE DATE OF SUCH ALTERATION AND A SPECIFIC DESCRIPTION OF THE ALTERATION.

MARK	DESCRIPTION	DATE	APPR.
A	ISSUED FOR BID (NOT FOR CONST.)	03/21/2024	

DISCLAIMER

DESIGNED BY: M. VELICEVIC
DATE: 03/21/2024
DWN BY: B.M.
CKD BY: M.V.
SOLICITATION NO.:
CONTRACT NO.:
SUBMITTED BY: WSP CANADA
PLOT DATE: 03/21/2024
SIZE: 22" X 34"
PLOTTED BY: B.M.

BUFFALO AND FORT ERIE PUBLIC BRIDGE AUTHORITY

WSP USA Inc.
40 Lafayette Drive
Suite 201
Buffalo, NY, 14202
(716) 853-1220

BUFFALO AND FORT ERIE PUBLIC BRIDGE AUTHORITY
PROJECT# PARE 3.0
PAVEMENT MARKINGS

CROSSING PATHS BUILDING FUTURES
THE PEACE BRIDGE

DRAWING NUMBER
M-2

C:\pw_wrk\wsp-ca18\dms09581\20M-00635-00-M02.dwg Thu, 21 Mar 2024 - 9:27am DeanG

GENERAL

1. UNLESS OTHERWISE NOTED, ALL DIMENSIONS ARE IN FEET / INCHES; HOWEVER, ALL FORCES ARE IN METRIC UNITS (PER TG-ABBR-02).

2. "WSP-S" REFERS TO WSP CANADA STRUCTURAL CONSULTANT.

3. PRIOR TO CONSTRUCTION, REVIEW STRUCTURAL DRAWINGS IN CONJUNCTION WITH DRAWINGS PROVIDED BY ALL OTHER CONSULTANTS. CONFIRM ALL DIMENSIONS, ELEVATIONS AND HEADROOM CLEARANCES, AND COORDINATE ALL OPENINGS, SLEEVES AND EMBEDDED ITEMS.

4. REPORT ANY DISCREPANCIES OR CONFLICTS BEFORE PROCEEDING WITH THE WORK.

5. DO NOT CUT OR DRILL ANY OPENINGS IN STRUCTURAL MEMBERS WITHOUT WRITTEN PERMISSION FROM WSP-S.

6. VERIFY EXISTING DIMENSIONS AND CONDITIONS ON SITE PRIOR TO CONSTRUCTION.

7. USE THESE DRAWINGS ONLY FOR THE PURPOSE IDENTIFIED IN THE REVISIONS COLUMN. DO NOT CONSTRUCT FROM THESE DRAWINGS UNLESS MARKED "ISSUED FOR CONSTRUCTION".

8. DO NOT USE INFORMATION ON THESE DRAWINGS FOR ANY OTHER PROJECT OR WORKS.

9. DO NOT SCALE THESE DRAWINGS.

10. UNLESS OTHERWISE NOTED ON DRAWINGS, FOLLOW TYPICAL DETAILS, WHICH SHOW STRUCTURAL INTENT RATHER THAN ACTUAL CONDITIONS FOR THIS PROJECT. IF A TYPICAL DETAIL INCLUDES A CROSS REFERENCE TO ANOTHER TYPICAL DETAIL WHICH IS NOT INCLUDED IN THE DRAWING SET, THE CROSS REFERENCED DETAIL IS NOT APPLICABLE ON THIS PROJECT.

11. ALL SECTIONS, DETAILS AND STATEMENTS NOTED AS "TYPICAL" APPLY TO LIKE / SIMILAR CONDITIONS IN THE STRUCTURE.

12. REFER TO ARCHITECTURAL DRAWINGS AND SPECIFICATIONS FOR REQUIRED FIRE RATING, SPRAYED FIREPROOFING, INTUMESCENT PAINTING AND ALL OTHER MEASURES REQUIRED TO ACHIEVE IT.

13. REFER TO ARCHITECTURAL DRAWINGS AND SPECIFICATIONS FOR WATERPROOFING, SEALERS, ETC.

14. REFER TO GEOTECHNICAL REPORT IN THE PEACE BRIDGE - GEC 5 YEAR TERM REPORT DATED 04/09/2021 AND BORING REPORTS PROVIDED BY THE PEACE BRIDGE AUTHORITY AND ARCHITECTURAL / CIVIL DRAWINGS AND SPECIFICATIONS FOR ALL SOIL WORKS.

15. DRAWINGS SHOW COMPLETED STRUCTURE ONLY. THEY DO NOT SHOW TEMPORARY WORKS FOR WHICH THE CONTRACTOR IS RESPONSIBLE AND WHICH MAY BE REQUIRED FOR EXECUTION OF THE PROJECT, INCLUDING TEMPORARY SHORING, BRACING, GUYS AND TIE DOWNS. THE CONTRACTOR TO ESTABLISH CONSTRUCTION PROCEDURE AND SEQUENCE TO ENSURE SAFETY OF THE WHOLE STRUCTURE AND ALL ITS COMPONENTS DURING ERECTION.

16. EXTENT OF ALL TEMPORARY SHORING FOR EXCAVATION WHICH MAY BE REQUIRED IS NOT NECESSARILY SHOWN ON STRUCTURAL DRAWINGS, CONTRACTOR TO DETERMINE. REFER TO SPECIFICATIONS FOR TEMPORARY SHORING REQUIREMENTS.

17. DESIGN AND CONSTRUCTION REVIEW OF ALL TEMPORARY WORKS TO BE CARRIED OUT BY A PROFESSIONAL ENGINEER RETAINED BY THE CONTRACTOR, LICENSED IN THE PLACE WHERE THE PROJECT IS LOCATED.

18. ANCHOR BOLTS AND OTHER EMBEDDED ITEMS ARE DESIGNED FOR LOADS ACTING ON THE COMPLETED STRUCTURE ONLY AND ARE NOT TO BE USED OR RELIED UPON FOR TEMPORARY SUPPORT OR BRACING DURING ERECTION UNLESS REVIEWED AND APPROVED BY THE CONTRACTOR'S ENGINEER RESPONSIBLE FOR THE ERECTION PROCEDURES.

19. CONSTRUCTION LOADS ON COMPLETED STRUCTURE NOT TO EXCEED DESIGN LOADS INDICATED ON DRAWINGS. FULL DESIGN LOADS MAY ONLY BE APPLIED AFTER THE CONCRETE REACHES ITS DESIGN STRENGTH.

20. UNLESS SHOWN ON STRUCTURAL DRAWINGS, DESIGN OF NON STRUCTURAL AND SECONDARY STRUCTURAL ELEMENTS AND THEIR CONNECTIONS TO THE PRIMARY BUILDING STRUCTURE ARE NOT WITHIN THE SCOPE OF SERVICES PROVIDED BY WSP-S. SUCH ELEMENTS INCLUDE (BUT ARE NOT LIMITED TO) THE FOLLOWING:

    1. MISCELLANEOUS STEEL ELEMENTS: STAIRS, RAILINGS, GUARDRAILS.
    2. PARTITIONS: MASONRY, GLASS, WOOD AND STEEL STUDS, PREFABRICATED PANELS
    3. BULKHEADS, SUSPENDED CEILINGS, INTERIOR AND EXTERIOR SIGNAGE.
    4. ARCHITECTURAL PRECAST, PRECAST STAIRS.
    5. EXTERIOR CLADDING: PRECAST PANELS, METAL WALL SYSTEMS, CURTAIN WALLS AND WINDOWS.
    6. MASONRY, STONE OR PRECAST VENEER CONNECTIONS TO BACKUP STRUCTURE.
    7. MODULAR ASSEMBLIES FOR THERMALLY BROKEN BALCONIES.
    8. SKYLIGHTS, SNOW FENCES, GUTTERS, ROOF ANCHORS, WINDOW WASHING SYSTEMS, CHIMNEYS AND STACKS.
    9. SUPPORTS FOR MECHANICAL AND ELECTRICAL EQUIPMENT: HANGERS, BRACES, POSTS, RACKS, SLEEPERS, SEISMIC RESTRAINTS, SUPPORT PLATFORMS AND PADS, SERVICE PLATFORMS.
    10. SUPPORTS AND SEISMIC RESTRAINTS FOR OTHER EQUIPMENT, SUCH AS MEDICAL AND SPORTS EQUIPMENT.
    11. STORAGE RACKS.
    12. LANDSCAPING ELEMENTS: WALLS, CURBS, BENCHES, PLANTERS, WATER FEATURES.
    13. LIGHT POLES, FLAG POLES, SIGNS AND THEIR FOUNDATIONS.

    WSP-S WILL NOT REVIEW DESIGN, DETAILING AND INSTALLATION OF THESE ELEMENTS, FOR WHICH SUPPLIERS AND / OR SPECIALTY PROFESSIONAL ENGINEERS ARE RESPONSIBLE; THE ONLY REVIEW PROVIDED (WHERE APPLICABLE) WILL BE FOR IMPACT ON THE BASE BUILDING STRUCTURE.

21. MAINTAIN A QUALITY CONTROL PLAN FOR STRUCTURAL WORK, AND MAKE IT AVAILABLE TO THE CONSULTANT UPON REQUEST. AT A MINIMUM, THE PLAN TO INCLUDE:

    1. NAMES OF PERSONNEL RESPONSIBLE FOR EXECUTION OF THE PLAN.
    2. MEANS AND METHODS FOR CONFIRMING MATERIAL COMPLIANCE WITH SPECIFICATIONS AND ASSOCIATED DOCUMENTATION PROCEDURES.
    3. PROGRAM FOR CONFIRMING AND DOCUMENTING COMPLIANCE WITH REQUIRED SUB-TRADE QUALIFICATIONS AND QUALIFICATIONS OF THEIR INDIVIDUAL EMPLOYEES AND SUB-CONTRACTORS.
    4. PROCEDURES FOR REVIEWING FIELD COMPLIANCE WITH CONSTRUCTION DOCUMENTS, INCLUDING DOCUMENTATION OF LOCATIONS REVIEWED, PHOTOGRAPHS TAKEN AND TIMING OF REVIEW. THE CONTRACTOR'S REVIEW TO BE COMPLETED PRIOR TO REVIEW BY THE CONSULTANT.
    5. PROCEDURES FOR RECTIFYING DEFICIENCIES NOTED BY THE CONTRACTOR, SUB-CONTRACTORS, CONSULTANTS, AND INDEPENDENT INSPECTION AGENCIES.

22. FOR INSPECTION AND TESTING REQUIREMENTS, REFER TO SPECIFICATIONS.

23. IN CASE OF DISCREPANCY BETWEEN GENERAL NOTES, DRAWINGS AND SPECIFICATIONS, COMPLY WITH THE MOST STRINGENT REQUIREMENTS.

DESIGN DATA

1. STRUCTURAL DESIGN IS IN ACCORDANCE WITH THE 2012 ONTARIO BUILDING CODE (OBC), SUPPLEMENTED BY THE USER'S GUIDE — NBC 2015 STRUCTURAL COMMENTARIES.

2. CONCRETE ELEMENTS ARE DESIGNED PER CSA A23.3-14 — DESIGN OF CONCRETE STRUCTURES.

3. STEEL ELEMENTS ARE DESIGNED PER CSA S16-14 — LIMIT STATE DESIGN OF STEEL STRUCTURES.

4. THE VALUES FOR CLIMATIC DATA USED IN THE DETERMINATION OF DESIGN LOADS HAVE BEEN OBTAINED FROM THE 2012 OBC AND ITS LATEST AMENDMENTS FOR THE SPECIFIC LOCATION OF FORT ERIE.

5. BASED ON THE USE AND OCCUPANCY, THE BUILDING IS DESIGNED TO THE REQUIREMENTS OF A HIGH IMPORTANCE CATEGORY.

6. DEAD LOAD (DL) IS THE SELF WEIGHT OF THE STRUCTURE PLUS THE SUPERIMPOSED DEAD LOAD.

7. UNLESS OTHERWISE NOTED, DESIGN LOADS SHOWN ON DRAWINGS ARE SPECIFIED (UNFACTORED) LOADS, TO BE USED FOR ULS DESIGN. FOR SLS DESIGN, THESE LOADS CAN BE REDUCED BY MULTIPLYING WITH THE RATIO OF APPROPRIATE IMPORTANCE FACTORS Ix(SLS) / Ix(ULS) GIVEN BELOW.

8. IF ONLY ONE VALUE IS GIVEN FOR A LOAD, CONSIDER IT LIVE LOAD.

9. FOR CONNECTION LOADS, "+" SIGN INDICATES TENSION AND "-" SIGN INDICATES COMPRESSION, EXCEPT FOR COLUMN LOADS WHERE "+" SIGN INDICATES COMPRESSION AND "-" SIGN INDICATES TENSION.

10. DEAD LOADS:

    TRUCK CANOPY ROOF: 1.2 kPa
    SALT BARN ROOF: 1.0 kPa

11. LIVE LOAD:
    TRUCK CANOPY ROOF: 1.0 kPa
    SALT BARN ROOF: 1.0 kPa

12. SNOW:

    Ss = 2.3 kPa Sr = 0.8 kPa Is (ULS) = 1.15 Is (SLS) = 0.9

    MINIMUM UNFACTORED SNOW LOAD = 2.24 kPa x Is

13. RAIN:

    24 HOUR RAINFALL = 108 mm

14. LATERAL LOADS IN THIS STRUCTURE ARE RESISTED BY:

    TRUCK CANOPY: CONCRETE CANTILEVERED COLUMN SYSTEM
    SALT BARN: STEEL MOMENT FRAMES

15. WIND:

    q50 = 0.46 kPa Iw (ULS) = 1.15 Iw (SLS) = 0.75

    BUILDING IS: LOW RISE
    TERRAIN TYPE: OPEN

16. SEISMIC:

    Sa(0.2) = 0.312 PGA = 0.202 IeFaSa(0.2) = .4056
    Sa(0.5) = 0.152 Rd = 1.5
    Sa(1.0) = 0.070 Ro = 1.3 SITE CLASSIFICATION = 'D' ASSUMED
    Sa(2.0) = 0.032 Ie = 1.3

    FACTORED BASE SHEARS:

    TRUCK CANOPY = 90 kN
    SALT BARN = 45 kN

SHOP DRAWINGS

1. REFER TO SPECIFICATIONS FOR SHOP DRAWINGS WHICH NEED TO BE SUBMITTED FOR REVIEW.

2. SUBMIT SIGNED AND SEALED TOWER CRANE SHOP DRAWINGS TO BE REVIEWED FOR IMPACT ON THE BASE BUILDING STRUCTURE.

3. REVIEW OF SHOP DRAWINGS BY WSP-S IS ON A SAMPLING BASIS, FOR GENERAL CONFORMITY WITH STRUCTURAL CONTRACT DOCUMENTS. IT IS NOT A DETAILED CHECK AND MUST NOT BE CONSTRUED AS RELIEVING THE CONTRACTOR OF HIS RESPONSIBILITY TO MAKE THE WORK ACCURATE AND IN CONFORMITY WITH ALL THE CONTRACT DOCUMENTS, TO REVIEW SHOP DRAWINGS AND TO COORDINATE WORK OF INTERFACING TRADES AND MANUFACTURE OF INTERFACING PRODUCTS.

4. REVIEW OF SHOP DRAWINGS DOES NOT IMPLY ANY CHANGE IN ANY OTHER CONSULTANTS' OR PROFESSIONALS' RESPONSIBILITIES RELATED TO DESIGN OF SPECIFIC ITEMS AS OUTLINED BY THE SPECIFICATIONS.

5. IF REQUIRED, ELECTRONIC FILES OF THE FULL SET OF STRUCTURAL DRAWINGS ARE AVAILABLE "AS-IS", AT A COST OF $100.00 PER SHEET, FOR USE AS BACKGROUND IN SHOP DRAWING PREPARATION, PROVIDED THAT THE OWNER AND THE OWNER'S CONSULTANTS ARE NOT HELD RESPONSIBLE FOR ANY ERRORS OR OMISSIONS ON THE DRAWINGS. THESE DRAWINGS ARE NOT TO BE SCALED.

6. ALLOW A MINIMUM OF 10 WORKING DAYS FOR REVIEW OF EACH SUBMISSION OF SHOP DRAWINGS IN WSP-S OFFICE. ALLOW MORE TIME WHEN LARGE QUANTITIES OF SHOP DRAWINGS ARE SUBMITTED. SUBMIT IN GENERAL CONFORMITY WITH THE SEQUENCE OF CONSTRUCTION INTENDED.

7. AFTER REVIEW, THE DRAWINGS WILL BE STAMPED AND RETURNED. DO NOT COMMENCE FABRICATION UNTIL RETURNED SHOP DRAWINGS HAVE BEEN EXAMINED.

8. SHOP DRAWINGS MARKED "**REVIEWED**" CAN BE USED FOR FABRICATION. DO NOT MAKE ANY CHANGES OR ADDITIONS TO THESE DRAWINGS WITHOUT NOTIFYING THE CONSULTANT.

9. SHOP DRAWINGS MARKED "**REVIEWED AS NOTED**" CAN BE USED FOR FABRICATION AFTER THE REVISIONS NOTED ARE IMPLEMENTED. DO NOT MAKE ANY FURTHER CHANGES OR ADDITIONS TO THESE DRAWINGS WITHOUT NOTIFYING THE CONSULTANT.

10. SHOP DRAWINGS MARKED "**REVISE AND RESUBMIT**" REQUIRE SUBSTANTIAL REVISIONS AND MUST BE RESUBMITTED FOR ADDITIONAL REVIEW PRIOR TO FABRICATION. ALL CHANGES AND ADDITIONS TO THE PREVIOUS SUBMISSION TO BE CLEARLY IDENTIFIED ON THE RESUBMITTED DRAWINGS. ONLY THE IDENTIFIED CHANGES WILL BE REVIEWED ON RE-SUBMISSION.

11. SHOP DRAWINGS MARKED "**REVIEWED FOR IMPACT ON BASE STRUCTURE ONLY**" SHOW WORKS WHICH ARE NOT WITHIN THE SCOPE OF STRUCTURAL CONSULTING SERVICES BUT AFFECT BEHAVIOUR OF THE BASE STRUCTURE. WSP-S WILL NOT REVIEW DESIGN OF THESE WORKS AND ASSUMES THAT THE INDICATED WEIGHTS AND ALL OTHER LOADS IMPOSED ON THE BASE STRUCTURE ARE CORRECTLY IDENTIFIED BY THE DESIGNER / SUPPLIER OF THESE ELEMENTS.

12. DRAWINGS MARKED "**NOT REVIEWED**" SHOW WORKS WHICH ARE NOT WITHIN THE SCOPE OF STRUCTURAL CONSULTING SERVICES AND DO NOT IMPACT THE BASE BUILDING STRUCTURE.

13. EXCEPT FOR TOWER CRANE AND EXCAVATION SHORING (WHICH WILL BE REVIEWED FOR IMPACT ON THE BASE STRUCTURE ONLY), WSP-S WILL NOT REVIEW DESIGN AND IMPLEMENTATION OF ANY TEMPORARY WORKS, NOR ASSESS IMPACT OF THESE WORKS ON THE BASE STRUCTURE. THE CONTRACTOR AND / OR THE PROFESSIONAL ENGINEER ENGAGED BY THE CONTRACTOR MUST ENSURE THAT THE BASE STRUCTURE IS NOT ADVERSELY AFFECTED BY THE TEMPORARY WORKS AND CONSTRUCTION PROCESS AND THAT TEMPORARY LOADS DO NOT EXCEED THE DESIGN LOADS INDICATED ON STRUCTURAL DRAWINGS.

14. DO NOT USE SHOP DRAWINGS AS A MEANS TO PROPOSE SUBSTITUTIONS OR ALTERNATIVES TO THE MATERIALS, PRODUCTS OR DETAILS INDICATED IN CONTRACT DOCUMENTS. SUCH SHOP DRAWINGS WILL BE MARKED "REVISE AND RESUBMIT".

15. PROVIDE FINAL RECORD DRAWINGS AFTER ALL CORRECTIONS ARE MADE.

FIELD REVIEW

1. WSP-S WILL PROVIDE PERIODIC FIELD REVIEW OF A REPRESENTATIVE SAMPLE OF THE STRUCTURAL WORKS DETAILED ON THESE DRAWINGS FOR GENERAL CONFORMANCE WITH CONTRACT DOCUMENTS. THESE REVIEWS DO NOT REPLACE THE CONTRACTOR'S RESPONSIBILITY TO IMPLEMENT AND MAINTAIN A QUALITY CONTROL PROGRAM, AND DO NOT MAKE WSP-S A GUARANTOR OF THE CONTRACTOR'S WORK.

2. CONSTRUCTION REVIEW REPORTS WILL OUTLINE ANY DEFICIENCIES FOUND.

3. ASSIST WSP-S DURING FIELD REVIEW, AND PROVIDE SAFE ACCESS TO WORK AREAS AS REQUIRED.

4. CHECK THE WORK PRIOR TO FIELD REVIEW TO CONFIRM IT IS COMPLETED AND IN ACCORDANCE WITH CONTRACT DOCUMENTS.

5. BRING TO THE ATTENTION OF WSP-S ANY DEFICIENCIES FOUND IN THE WORK TOGETHER WITH A PROPOSAL FOR REMEDY. WSP-S WILL DECIDE WHAT CORRECTIVE ACTION MAY BE TAKEN AND ISSUE THE NECESSARY INSTRUCTIONS.

6. PROVIDE REASONABLE NOTICE (NOT LESS THAN 24 HOURS) TO ALLOW FOR THE FIELD REVIEW OF THE FOLLOWING:

    a. CONCRETE WALLS, BEAMS AND COLUMNS — BEFORE CLOSING FORMS
    b. ALL OTHER CONCRETE — BEFORE EACH CONCRETE POUR
    c. STRUCTURAL STEEL — BEFORE COVERING UP OR PLACING STEEL DECK
    d. METAL ROOF DECK — BEFORE ROOFING

7. SCHEDULE REVIEW WORK TO OCCUR DURING NORMAL BUSINESS HOURS.

8. ORGANIZE FOR FIELD REVIEW OF ALL PROPRIETARY PRODUCTS AND OTHER STRUCTURAL WORKS DESIGNED BY SPECIALTY ENGINEERS. THE REVIEW TO BE BY THE ENGINEERS RESPONSIBLE FOR THE DESIGN OR BY OTHER ENGINEERS DESIGNATED BY THE ENGINEERS RESPONSIBLE FOR THE DESIGN AND LICENSED IN THE PLACE WHERE THE PROJECT IS LOCATED. SUBMIT CONSTRUCTION REVIEW REPORTS FOR CONSULTANT'S RECORD.

EXISTING STRUCTURES

1. EXISTING CONDITIONS ARE ASSUMED. SURVEY THE EXISTING STRUCTURE AFTER REMOVING FINISHES AND REPORT ANY VARIATIONS TO WSP-S BEFORE PROCEEDING WITH THE WORK.

2. DESIGN OF STRUCTURAL WORKS RELATED TO THE EXISTING BUILDING HAS BEEN CARRIED OUT AS FAR AS PRACTICAL, GIVEN LIMITED AVAILABILITY OF THE EXISTING DRAWINGS AND LIMITED RECORDS OF THE STRUCTURAL MODIFICATIONS LIKELY TO HAVE BEEN MADE THROUGH THE LIFE OF THE BUILDING. MODIFICATIONS TO THE PROPOSED STRUCTURAL FRAMING AND / OR DETAILS MAY BE REQUIRED IF EXISTING CONDITIONS ARE FOUND TO BE DIFFERENT FROM THOSE ASSUMED AND SHOWN ON DRAWINGS.

3. TAKE ALL PRECAUTIONS NECESSARY TO PROTECT EXISTING STRUCTURES DURING DEMOLITION AND NEW CONSTRUCTION.

4. DISCONNECT ALL SERVICES IN THE AREAS AFFECTED BY DEMOLITION AND NEW CONSTRUCTION. REROUTE SERVICES AS REQUIRED TO KEEP THE REMAINDER OF THE BUILDING OPERATIONAL.

5. SAFELY STORE ALL STRUCTURAL ELEMENTS AND OTHER PRODUCTS WHICH ARE TO BE RE-USED.

6. REMOVE FROM SITE ALL OTHER STRUCTURAL ELEMENTS AND PRODUCTS WHICH ARE NOT INDICATED TO BE HANDED OVER TO THE OWNER.

7. SCHEDULE WORK TO MINIMIZE EFFECT ON THE EXISTING BUILDING OPERATION. USE EQUIPMENT AND PROCEDURES TO MINIMIZE NOISE, DUST AND VIBRATIONS. SUBMIT PROPOSED SCHEDULE FOR REVIEW BY THE CONSULTANT AND THE OWNER.

8. ALL DEMOLITION, SHORING AND OTHER TEMPORARY WORKS TO BE DESIGNED BY A PROFESSIONAL ENGINEER RETAINED BY THE CONTRACTOR, LICENSED IN ONTARIO. PREPARE DRAWINGS SIGNED AND SEALED BY THAT ENGINEER SHOWING DEMOLITION PROCEDURE AND SEQUENCE AND ALL THE NECESSARY SHORING.

9. INSTALL AND AFTERWARDS REMOVE ALL TEMPORARY SHORING AND BRACING REQUIRED TO ENSURE THE INTEGRITY OF THE EXISTING STRUCTURE DURING CONSTRUCTION.

10. REFER TO TYPICAL DETAIL TC-SL-71 FOR CONCRETE SAWCUTTING PROCEDURE.

11. DO NOT ALTER MATERIAL PROPERTIES OF THE STRUCTURAL STEEL WHICH IS TO REMAIN BY CUTTING AND DEMOLITION PROCEDURE.

12. ASSESS CAPACITY OF THE EXISTING STRUCTURE AND CONSTRUCTION LOADS APPLIED TO IT. PROVIDE ADEQUATE SHORING IF THE LOADS EXCEED THE EXISTING STRUCTURAL CAPACITY.

13. MAKE GOOD ALL EXISTING WORK DISTURBED BY THE SHORING OPERATIONS, DEMOLITION, EXCAVATION AND OTHER CONSTRUCTION PROCEDURES.

14. COORDINATE SCHEDULE OF WORK WITH THE PEACE BRIDGE AUTHORITY, CBP, OTHER TRADES OR UNDER OTHERS CONTRACTS, SCHEDULE OF ACCESS, LOADING AND DELIVERIES, ETC.

FOUNDATIONS

1. STRUCTURAL DESIGN IS BASED ON THE INFORMATION PROVIDED IN THE GEOTECHNICAL INFORMATION SECTION OF THE PEACE BRIDGE — GEC 5 YEAR TERM REPORT DATED 04/09/2021 AND BORING REPORTS PROVIDED BY THE PEACE BRIDGE AUTHORITY.

2. THE ALLOWABLE BEARING PRESSURE IS 190 kPa (4000 PSF).

3. SEISMIC SITE CLASS ASSUMED TO BE 'D'. TO BE CONFIRMED BY A GEOTECHNICAL CONSULTANT.

4. CONSTRUCT ALL FOOTINGS ON STRATA CAPABLE TO PROVIDE THE BEARING RESISTANCE NOTED, BUT NOT ABOVE THE ELEVATIONS INDICATED ON DRAWINGS.

5. STRUCTURAL DRAWINGS SHOW FOOTINGS AT ELEVATIONS WHERE THE REQUIRED BEARING RESISTANCE IS ANTICIPATED. GEOTECHNICAL CONSULTANT TO REVIEW AND APPROVE IN WRITING ALL BEARING SURFACES PRIOR TO CONSTRUCTING FOOTINGS.

6. IF THE ASSUMED BEARING RESISTANCE IS NOT OBTAINED AT THE UNDERSIDE OF FOOTING ELEVATION INDICATED ON DRAWINGS, EXTEND EXCAVATION UNTIL COMPETENT SOIL IS REACHED, AND PROVIDE LEAN CONCRETE FILL (OR CONCRETE SAME AS SPECIFIED FOR THE FOOTING) TO UNDERSIDE OF FOOTING. DO NOT DROP DOWELS; MAINTAIN THE SPECIFIED PROJECTION REQUIRED FOR LAPS.

7. PROVIDE MIN. 50 (2") DEEP MUD SLAB AS REQUIRED TO PROTECT BOTTOM OF EXCAVATION AND PLACE REBAR, AND IN ALL CASES WHERE RECOMMENDED IN GEOTECHNICAL REPORT OR SHOWN ON DRAWINGS.

8. UNLESS OTHERWISE NOTED, THE LONGER DIMENSION OF RECTANGULAR SPREAD FOOTINGS TO BE PARALLEL TO THE LONGER COLUMN DIMENSION (FOR CONCRETE COLUMNS), OR TO COLUMN WEB (FOR STEEL COLUMNS).

9. REFER TO TYPICAL DETAIL TC-FDN-33 FOR STEPS IN FOOTINGS.

10. FOR FROST PROTECTION, MINIMUM DISTANCE FROM FINISHED GRADE TO UNDERSIDE OF FOOTINGS, AT BUILDING PERIMETER AND IN UNHEATED AREAS TO BE NOT LESS THAN 1200.

11. WHERE UNDERSIDES OF PERIMETER WALLS, GRADE BEAMS OR PILE CAPS ARE SHOWN SUCH THAT THE REQUIRED FROST PROTECTION INDICATED ABOVE IS NOT PROVIDED, PROVIDE FROST CUSHION BELOW THE FULL LENGTH OF WALLS AND GRADE BEAMS AND BELOW OVERHANGING PORTION OF PILE CAPS. REFER TO GEOTECHNICAL REPORT FOR MINIMUM THICKNESS OF THE FROST CUSHION.

12. UNLESS OTHERWISE NOTED, LONGER DIMENSION OF RECTANGULAR PIER TO BE PARALLEL TO THE LONGER COLUMN DIMENSION (FOR CONCRETE COLUMNS), OR TO THE COLUMN WEB (FOR STEEL COLUMNS)

13. UNLESS OTHERWISE NOTED, CENTRE FOOTINGS AND PIERS UNDER CENTROID OF COLUMNS. WHERE THERE ARE NO COLUMNS ABOVE, CENTER UNDER WALLS OR GRADE BEAMS.

14. LOCATE ALL EXISTING UNDERGROUND SERVICES PRIOR TO EXCAVATION.

15. THE LINE OF SLOPE BETWEEN ADJACENT EXCAVATIONS FOR FOOTINGS OR TRENCHES NOT TO EXCEED A RISE OF 7 IN A RUN OF 10. REFER TO TYPICAL DETAIL TC-FDN-41.

16. KEEP EXCAVATION DRAINED AND FREE OF WATER AT ALL TIMES.

17. PROTECT FOOTINGS, PIERS, FOUNDATION WALLS, SLABS-ON-GRADE AND ADJACENT SOIL AGAINST FREEZING AND FROST ACTION AT ALL TIMES DURING CONSTRUCTION. DO NOT POUR CONCRETE AGAINST FROZEN EARTH.

18. DO NOT USE EARTH FORMS UNLESS APPROVED IN WRITING BY WSP-S AND GEOTECHNICAL CONSULTANT. FOR ELEMENTS APPROVED TO BE CAST AGAINST SOIL, INCREASE FOOTING SIZE SHOWN ON DRAWINGS AS REQUIRED TO OBTAIN 75 (3") CONCRETE COVER AGAINST SOIL.

19. PLACE ANCHOR RODS AND DOWELS BEFORE CONCRETE IS CAST. USE TEMPLATES TO KEEP IN POSITION.

20. UNLESS NOTED OTHERWISE, PROVIDE DRAINAGE WITH WEEPING TILE TIED INTO MECHANICAL DRAINAGE SYSTEM AT ALL BASEMENT WALLS. REFER TO GEOTECHNICAL REPORT FOR FREE DRAINING BACKFILL REQUIREMENTS AND GROUND WATER FLOW.

21. IF WEEPING TILE AT BASEMENT WALL IS LOCATED AT THE INSIDE FACE OF THE WALL (NOT AT THE FACE SUPPORTING EARTH), PROVIDE MIN. 50 (2") DIA. WEEPERS AT MAX 2000 (6'-8") O/C THROUGH THE WALL. LOCATE JUST ABOVE TOP OF FOOTING.

22. IF A RETAINING WALL DOES NOT HAVE A WEEPING TILE, PROVIDE MIN. 50 (2") DIA. WEEPERS AT MAX 2000 (6'-8") O/C THROUGH THE WALL. LOCATE 200 (8") ABOVE THE LOWER GRADE LEVEL.

23. DO NOT BACKFILL AGAINST WALLS RETAINING EARTH UNTIL ELEMENTS PROVIDING LATERAL SUPPORT, INCLUDING SLAB ON GRADE AND ALL SUSPENDED LEVELS, ARE COMPLETED AND CONCRETE HAS REACHED 75% OF ITS DESIGN STRENGTH.

24. WHERE SLAB ON GRADE IS USED TO TIE THE TOP OF A WALL RETAINING EARTH, PROVIDE TEMPORARY SHORING OF THE WALL FROM START OF BACKFILLING UNTIL THE ENTIRE SLAB ON GRADE REACHES 75% OF ITS DESIGN STRENGTH.

25. FOR ELEMENTS THAT ARE TO BE BACKFILLED ON BOTH SIDES, PLACE BACKFILL SIMULTANEOUSLY ON BOTH SIDES SUCH THAT HEIGHTS DO NOT VARY BY MORE THAN 600 (2'-0") FROM ONE SIDE TO THE OTHER.

IT IS A VIOLATION OF THE LAW FOR ANY PERSON, UNLESS ACTING UNDER THE DIRECT SUPERVISION OF A LICENSED ARCHITECT OR ENGINEER, TO ALTER ANY ITEM ON THIS DOCUMENT. IF THIS DOCUMENT IS ALTERED, THE ALTERING ARCHITECT OR ENGINEER SHALL AFFIX TO THEIR ITEM THE WORDS "ALTERED BY" FOLLOWED BY THEIR SIGNATURE AND THE DATE OF SUCH ALTERATION AND A SPECIFIC DESCRIPTION OF THE ALTERATION.

DISCLAIMER

MARK	DESCRIPTION	DATE	APPR
A	ISSUED FOR BID (NOT FOR CONST.)	03/21/2024	

DESIGNED BY: A. Hossainy
DWN BY: A. Hossainy
CKD BY: Checker
SUBMITTED BY:
DATE: 03/21/2024
SOLICITATION NO.:
CONTRACT NO.: 187928
FILE NAME: BIM 360://BuFt-DD-50900041 - Peace Bridge GEC - R22/PARE 3.0 - Structural R21.rvt
SIZE: 22" X 34"
PLOTTED BY:
PLOT DATE: 03/01/2024

BUFFALO AND FORT ERIE
PUBLIC BRIDGE AUTHORITY
xx

WSP USA Inc.
1600 Liberty Drive
Suite 200
Niagara Falls, NY 14304
(716) 693-1210

BUFFALO AND FORT ERIE PUBLIC
BRIDGE AUTHORITY
PROJECT# XXX PARE 3.0

STRUCTURAL NOTES 1/3

CROSSING PATHS ★ BUILDING FUTURES
THE PEACE BRIDGE

DRAWING NUMBER
SG001

CAST-IN-PLACE CONCRETE

1. CONCRETE IS SPECIFIED PER ALTERNATIVE 1 - PERFORMANCE SPECIFICATION, AS OUTLINED IN CSA A23.1. THE CONTRACTOR AND THE CONCRETE SUPPLIER TO MEET ALL CERTIFICATION, DOCUMENTATION, AND QUALITY CONTROL REQUIREMENTS.

2. CONTRACTOR AND CONCRETE SUPPLIER TO ENSURE THAT PLASTIC AND HARDENED MIX PROPERTIES MEET SITE REQUIREMENTS FOR PLACING, FINISHING AND THE SPECIFIED PERFORMANCE REQUIREMENTS.

3. CONCRETE SUPPLIER TO BE CERTIFIED BY THE READY MIXED CONCRETE ASSOCIATION OF ONTARIO.

4. CEMENT TO BE PORTLAND CEMENT TYPE GU UNLESS NOTED OTHERWISE OR REQUIRED BY EXPOSURE CLASS.

5. CONCRETE TO BE NORMAL DENSITY (MIN. 2300 kg/m^3) UNLESS NOTED OTHERWISE.

6. NOMINAL MAXIMUM SIZE OF COARSE AGGREGATE TO BE 20 (3/4") UNLESS NOTED OTHERWISE.

7. UNLESS NOTED OTHERWISE, CONCRETE TO BE IN ACCORDANCE WITH THE FOLLOWING SCHEDULE:

ELEMENT	COMPRESSIVE STRENGTH (MPa) AT 28 DAYS (SEE NOTE #3 BELOW)	EXPOSURE CLASS	SPECIAL REQUIREMENTS & REMARKS
FOOTINGS	30	N / F2]	
FOOTINGS IN VEHICLE ACCESSIBLE AREAS	35	C1	
PIERS & PILASTERS	30	N / F2	
PIERS & PILASTERS IN VEHICLE ACCESSIBLE AREAS	35	C1	
FOUNDATION WALLS, PITS	30	N / F2	
OTHER INTERIOR WALLS	30	N	
COLUMNS	30	N / F2	
COLUMNS IN VEHICLE ACCESSIBLE AREAS	35	C1	
SLAB-ON-GRADE (HEATED, INTERIOR AREAS)	30	N-CF	FOR SLABS 125 (5") AND THICKER, NOMINAL MAXIMUM SIZE OF COARSE AGGREGATE 40 (1-1/2"). CONCRETE COVER NOT TO BE LESS THAN 40 (1-1/2 AT RESILIENT FINISHES, USE W/CM <0.45.
SLAB-ON-GRADE (HEATED VEHICLE ACCESSIBLE AREAS)	30	C4	FOR SLABS 125 (5") AND THICKER, NOMINAL MAXIMUM SIZE OF COARSE AGGREGATE 40 (1-1/2") CONCRETE COVER NOT TO BE LESS THAN 60 (2-3/8
SLAB-ON-GRADE (UNHEATED VEHICLE ACCESSIBLE AREAS), SIDEWALKS, FROST SLABS	32	C2	FOR SLABS 125 (5") AND THICKER, NOMINAL MAXIMUM SIZE OF COARSE AGGREGATE 40 (1-1/2") CONCRETE COVER NOT TO BE LESS THAN 60 (2-3/8")
NON-STRUCTURAL TOPPINGS, HOUSEKEEPING PADS, FLOATING SLABS	25	N	NOMINAL MAXIMUM SIZE OF COARSE AGGREGATE: 10 (3/8") FOR TOPPINGS BETWEEN 25 (1") AND 35 (1-3/8")THICK, 14 (9/16")FOR TOPPINGS BETWEEN 35 (1-3/8") AND 60 (2-3/8") THICK
LEAN CONCRETE, MUDSLABS	10	N	
UNSHRINKABLE FILL	0.4 MAX.		

NOTES:

1. WHERE EXPOSURE CLASS IS NOTED "N / F2", USE "F-2" EXPOSURE CLASS FOR PERIMETER AND EXTERIOR NON-INSULATED ELEMENTS ABOVE THE FROST LINE, AND FOR ELEMENTS IN INTERIOR UNHEATED SPACES, WHICH ARE SUSCEPTIBLE TO FREEZING. USE "N" EXPOSURE CLASS FOR ELEMENTS PROTECTED FROM FREEZING.
2. LIMIT NOMINAL MAXIMUM AGGREGATE SIZE TO 10 (3/8") FOR COLUMNS WITH SMALLEST DIMENSION LESS THAN 300 (12") AND FOR WALLS LESS THAN 200 (8") THICK
3. WHERE HVSCM (AS DEFINED IN CSA A23.1) OR ANY CLASS "S" EXPOSURE CONCRETE IS USED, SPECIFIED CONCRETE STRENGTH TO BE ATTAINED AT 56, RATHER THAN AT 28 DAY.
4. MINIMUM DOSAGE OF CORROSION INHIBITOR IS 10L/m^3 OF 30% SOLUTION OF CALCIUM NITRITE, AS PER CSA-S413.

8. REFER TO CSA A23.1 FOR THE MAXIMUM WATER/CEMENT RATIO, MINIMUM COMPRESSIVE STRENGTH, AIR CONTENT, CURING REQUIREMENTS, CHLORIDE ION PENETRABILITY AND ALTERNATE CEMENT TYPES TO MEET THE REQUIREMENTS FOR THE NOTED EXPOSURE CLASS.

9. WHERE REQUIRED BY SPECIFICATIONS, PROVIDE MINIMUM AMOUNT OF SUPPLEMENTAL CEMENTING MATERIALS SPECIFIED FOR THE OVERALL PROJECT.

10. DO NOT ADD WATER TO CONCRETE ON SITE.

11. CONVEY CONCRETE FROM TRUCK TO FINAL LOCATION BY METHODS WHICH WILL PREVENT SEPARATION OR LOSS OF MATERIAL. MAXIMUM FREE FALL NOT TO EXCEED 1.5m (5'-0"). CONSOLIDATE CONCRETE USING MECHANICAL VIBRATORS.

12. PLACE CONCRETE AS CLOSE AS POSSIBLE TO FINAL LOCATION TO AVOID SEGREGATION. VIBRATE ALL CONCRETE.

13. PROTECT CONCRETE FROM FREEZING. DO NOT PLACE CONCRETE AGAINST FROZEN GROUND. USE COLD WEATHER CONCRETING METHODS IN ACCORDANCE WITH CSA-A23.1.

14. PROTECT CONCRETE FROM EXCESSIVE HEAT AND DRYING. USE HOT WEATHER CONCRETING METHODS IN ACCORDANCE WITH CSA-A23.1.

15. SALT BARN FLOOR SLAB CONCRETE SHALL INCLUDE A CORROSION INHIBITIING ADMIXTURE. FINISHED FLOOR SHALL RECEIVE A HARDENING AND DUSTPROOOFING SEALANT.

16. PROVIDE EMERY AGGREGATE FINISH ON STAIRS AND RAMPS.

15. PROVIDE PENETRATING SEALER AT COLUMNS AND WALLS IN VEHICLE ACCESSIBLE AREAS IN ACCORDANCE WITH TYPICAL DETAILS TC-COL-41.

16. CHAMFER ALL EXPOSED CORNERS ¾" UNLESS OTHERWISE NOTED.

17. COLUMNS

    1. DO NOT PLACE RECESSED BOXES IN CONCRETE COLUMNS WITHOUT PRIOR APPROVAL FROM STRUCTURAL CONSULTANT.
    2. MAXIMUM AREA OF CONCRETE DISPLACED BY CONDUITS EMBEDDED IN COLUMNS (INCLUDING THE CONDUIT AND THE PROJECTED AREA OF THE CONDUIT EXIT PATH) NOT TO EXCEED 4% OF THE COLUMN CROSS SECTIONAL AREA, REFER TO TYPICAL DETAIL TC-MISC-22 FOR FURTHER EXPLANATION AND GUIDELINES.
    3. WHERE APPLICABLE, COLUMN OFFSETS FROM GRIDLINES ARE NOTED ON DRAWINGS. UPPER COLUMNS ARE CENTRED ON COLUMNS BELOW UNLESS NOTED OTHERWISE.

18. CONSTRUCTION & CONTROL JOINTS

    1. PROVIDE JOINTS WHERE SPECIFIED OR SHOWN ON DRAWINGS. LOCATE SO AS NOT TO IMPAIR THE REQUIRED STRENGTH OF THE STRUCTURE. SUBMIT JOINT LAYOUT FOR WSP-S REVIEW AND APPROVAL A MINIMUM OF 2 WEEKS PRIOR TO POURING CONCRETE. REFER TO TYPICAL DETAILS AND SPECIFICATIONS FOR ADDITIONAL INFORMATION.
    2. UNLESS OTHERWISE NOTED, PROVIDE STANDARD CONTINUOUS 38 x 89 (2x4) FORMED KEYS AT ALL CONSTRUCTION JOINTS. CENTER AT JOINTS AND CHAMFER SIDES.
    3. IF A SPECIFIC CONSTRUCTION JOINT DETAIL IS SHOWN ON DRAWINGS, IT CAN NOT BE SUBSTITUTED BY ANY ALTERNATIVE CONSTRUCTION JOINT DETAIL.
    4. HORIZONTAL CONSTRUCTION JOINTS IN CONCRETE WALLS (OTHER THAN AT UNDERSIDE OF SLABS) ARE NOT PERMITTED, EXCEPT WHERE SHOWN ON THESE DRAWINGS.
    5. NON-STRUCTURAL SLABS ON GRADE AND UNBONDED TOPPINGS: UNLESS NOTED OTHERWISE, PROVIDE CONSTRUCTION JOINTS AT 30m (100ft) MAXIMUM IN BOTH DIRECTIONS, WITH CONTROL JOINTS IN BETWEEN AT 25 TIMES THE SLAB THICKNESS, BUT NOT MORE THAN 5m (15ft). LONGER DIMENSION OF ANY SOG SEGMENT CREATED BY CONSTRUCTION AND CONTROL JOINTS NOT TO EXCEED 1.25 TIMES THE SHORTER DIMENSION OF THE SEGMENT. CONSIDER SLAB DEPRESSIONS AND PITS WHEN PROPOSING LAYOUT, AND SHOW ON LAYOUT DRAWINGS. COMPLETE SAWCUTTING WITHIN 6 TO 18 HOURS OF PLACING CONCRETE. REFER TO SPECIFICATIONS FOR ADDITIONAL REQUIREMENTS.
    6. DO NOT PLACE CONTROL JOINTS IN STRUCTURAL SLAB ON GRADE; PROVIDE CONSTRUCTION JOINTS.
    7. BONDED TOPPING: JOINTS TO MATCH LOCATIONS OF THOSE IN BASE SLAB.
    8. FOUNDATION WALLS: PROVIDE VERTICAL CONSTRUCTION JOINTS AT 30m (100ft) MAXIMUM.
    9. INTERIOR WALLS (EXCEPT SHEAR WALLS), AND BASEMENT WALLS IN HEATED AREAS: PROVIDE VERTICAL CONSTRUCTION JOINTS AT 30m (100ft) MAXIMUM, WITH CONTROL JOINTS IN BETWEEN AT 7.5m (25ft) MAXIMUM. LOCATE FIRST JOINT MAXIMUN 4.5m (15ft) FROM ANY CORNER. LOCATE CONSTRUCTION JOINTS WITH WATERSTOPS MIN. 300 (12") FROM ANY WALL CORNER OR INTERSECTION. SEE TYPICAL DETAIL TC-WALL-22 FOR ACCEPTABLE CONTROL JOINT LOCATIONS.
    10. SHEAR WALLS: NO CONSTRUCTION JOINTS (OTHER THAN AT UNDERSIDE OF SLABS) NOR CONTROL JOINTS UNLESS SHOWN ON DRAWINGS.
    11. FREE STANDING WALLS WITH BOTH FACES EXPOSED AND SUBJECT TO THERMAL CYCLING (UNINSULATED EXTERIOR WALLS, WALLS IN UNHEATED AREAS): PROVIDE VERTICAL KEYED EXPANSION JOINTS AT 5m (16ft) MAXIMUM.
    12. EXTERIOR RETAINING WALLS: PROVIDE VERTICAL CONTROL JOINTS AT 5m (16ft) MAXIMUM, WITH KEYED EXPANSION JOINTS AT 15m (50ft) MAXIMUM.
    13. OTHER WALLS IN UNHEATED AREAS: PROVIDE VERTICAL CONSTRUCTION JOINTS AT 30m (100ft) MAXIMUM, AND CONTROL JOINTS AT 5m (16ft) MAXIMUM. LOCATE CONTROL JOINTS NOT MORE THAN 2.5m (8ft) FROM EACH SIDE OF CONSTRUCTION JOINTS AND ANY WALL CORNER.

CONCRETE REINFORCEMENT

1. REINFORCEMENT TO CONFORM TO THE FOLLOWING STANDARDS:

   DEFORMED BARS — CSA G30.18, GRADE 400R OR 400W UNLESS GRADE 500R / 500W IS INDICATED ON DRAWINGS. WHERE REBAR ARE SHOWN TO BE USE ONLY GRADE 400W/500W.

   WELDED WIRE FABRIC — ASTM A1064/A1064M, YIELD STRENGTH 450 MPA, SUPPLIED IN FLAT SHEETS ONLY.

2. ALL REINFORCING BAR SIZES ARE METRIC; "M" IS NOT NECESSARILY MARKED AFTER A BAR SIZE. FOR EXAMPLE, 10-15B NOTED ON PLAN INDICATES 10 BARS OF 15M DIAMETER, PLACED AT BOTTOM.

3. ALL REBAR HOOKS TO BE STANDARD LENGTH 90° OR 180° HOOKS. REBAR LENGTHS LISTED ON DRAWINGS DO NOT INCLUDE THE HOOK LENGTH.

4. WHERE TWO BARS OF DIFFERENT SIZE ARE LAPPED IN TENSION, SPLICE LENGTH TO BE EQUAL TO THE SMALLER BAR'S TENSION LAP SPLICE, OR TO THE LARGER BAR'S TENSION DEVELOPMENT LENGTH, WHICHEVER IS LONGER.

5. WHERE TWO BARS OF DIFFERENT SIZE ARE LAPPED IN COMPRESSION, SPLICE LENGTH TO BE EQUAL TO THE SMALLER BAR'S COMPRESSION LAP SPLICE, OR TO THE LARGER BAR'S COMPRESSION DEVELOPMENT LENGTH, WHICHEVER IS LONGER.

6. FOR BUNDLED BARS, FULLY STAGGER SPLICES OF EACH INDIVIDUAL BAR IN THE BUNDLE.

7. LAP WELDED WIRE FABRIC SHEETS BY ONE SPACING OF CROSS WIRES + 50 (2"), MEASURED BETWEEN THE OUTERMOST CROSS WIRES IN EACH SHEET.

8. PROVIDE ADDITIONAL SUPPORT BARS AS REQUIRED TO ADEQUATELY SUPPORT AND SECURE ALL REINFORCEMENT AND PREVENT MOVEMENT WHEN PLACING CONCRETE.

9. PROVIDE SUFFICIENT CHAIRS TO REINFORCING TO MAINTAIN SPECIFIED CONCRETE COVER.

10. PLACE WELDED WIRE FABRIC IN SLABS ON GRADE AT 1/3 SLAB THICKNESS BELOW TOP OF SLAB. PROVIDE ADEQUATE CHAIRS TO KEEP IN SPECIFIED POSITION. LIFTING WWF AFTER CONCRETE IS POURED TO BRING IT IN POSITION IS NOT ACCEPTABLE.

11. ALL REINFORCING TO BE CLEAN, FREE OF LOOSE SCALE, OIL, DIRT, RUST, AND ANY OTHER FOREIGN COATING THAT AFFECT BONDING CAPACITY.

12. MINIMUM CLEAR SPACING BETWEEN ADJACENT BARS TO BE AT LEAST 1.4 TIMES THE BAR DIAMETER OR 1.4 TIMES THE NOMINAL MAXIMUM SIZE OF THE COARSE AGGREGATE, WHICHEVER IS MORE.

13. WHERE PARALLEL REINFORCEMENT IS PLACED IN TWO OR MORE LAYERS, POSITION BARS IN UPPER LAYER DIRECTLY ABOVE THE BARS IN LOWER LAYER, MAINTAINING THE MINIMUM CLEAR SPACING BETWEEN LAYERS AS SPECIFIED ABOVE.

14. UNLESS NOTED OTHERWISE ON DRAWINGS MINIMUM CONCRETE COVER TO PRINCIPAL REINFORCEMENT TO BE AS FOLLOWS (ALSO REFER TO TYPICAL DETAIL TC-RENF-21):

EXPOSURE CLASS:	N, N-CF	F1, F2, S1, S2, S3	C-XL, C1, C2, C3
SURFACES CAST AGAINST GROUND	75 (3")		
FOOTINGS	≤ 35M: 40 (1-5/8")	≤ 25M: 40 (1-5/8") 30M: 45 (1-3/4") 35M: 55 (2-1/8")	≤ 30M: 60 (2-3/8") 35M: 75 (3")
SLAB ON GRADE — TOP COVER	≤ 25M: 25 (1")	≤ 20M: 30 (1-1/4") ≤ 25M: 40 (1-5/8")	≤ 20M: 40 (1-5/8") 25M: 50 (2")
SLAB ON GRADE NOT CAST AGAINST GROUND — BOTTOM COVER (CAST ON MUD SLAB, VAPOUR BARRIER, RIGID INSULATION)	≤ 25M: 40 (1-5/8")		≤ 30M: 60 (2-3/8")
COLUMNS, WALLS, PIERS	≤ 45M: 50 (2") 55M: 55 (2-1/8")	≤ 35M: 55 (2-1/8") 45M: 70 (2-3/4") 55M: 85 (3-3/8")	≤ 35M: 75 (3") 45M: 90 (3-1/2") 55M: 110 (4-3/8")

NOTES:

1. COVERS SHOWN ABOVE MEET 2h FIRE RATING REQUIREMENTS; SEE DRAWINGS FOR AREAS WHICH REQUIRE 3 OR 4 HOUR FIRE RATING AND PROVIDE INCREASED COVER AS INDICATED.
2. COVERS SHOWN ABOVE ASSUME 20 (3/4") MAXIMUM NOMINAL SIZE OF CONCRETE AGGREGATE (Øa). REFER TO CONCRETE MIX DESIGN TABLE IN CAST-IN-PLACE CONCRETE NOTES FOR CONCRETE WITH LARGER AGGREGATE SIZE, AND INCREASE COVER TO REINFORCING CLOSEST TO THE SURFACE BY 1.0x Øa FOR "N_" CONCRETE, BY 1.5x Øa FOR "F_" AND "S_" CONCRETE, AND 2.0x Øa FOR "C_" CONCRETE.
3. "EXPOSED TO VEHICLE TRAFFIC" MEANS LOCATED WITHIN 1200 (4'-0") FROM VEHICLE ACCESSIBLE AREAS.
4. FOR BUNDLED BARS, PROVIDE COVER REQUIRED FOR A SINGLE BAR WITH EQUIVALENT CROSS-SECTIONAL AREA. FOR EXAMPLE, 2-25M BUNDLED BARS WITH TOTAL CROSS-SECTIONAL AREA = 1000mm² ARE EQUIVALENT TO 1-35M BAR, THEREFORE USE COVER TO BUNDLED BARS SAME AS COVER TO 1-35M BAR.
5. FOR BARS WITH 90° HOOKS, MINIMUM COVER NOT TO BE LESS THAN SHOWN ON TC-REINF-01/02.

STRUCTURAL STEEL

1. CONFORM TO CSA S16.
2. MATERIALS: TO CSA G40.21 UNLESS OTHERWISE NOTED, WITH THE FOLLOWING GRADES:

   W, WWF AND S SECTIONS, CHANNELS AND ANGLES: 350W, OR ASTM A992, GRADE 50 (345MPa).

   PLATES, BARS: 350W, ASTM A572-GR50

   HOLLOW STRUCTURAL SECTIONS: 350W (CLASS "C" OR "H"), ASTM A1085 GRADE 50 (345 MPa)
   OR ASTM A500 (GRADE 'C').

   PIPE: ASTM A53

   BOLTS:

   ASTM F3125 GRADE A325M, UNLESS NOTED

   ANCHOR RODS:

   ASTM F1554 GRADE 55 W/SUPPLEMENT S1

3. DETAILS ON STRUCTURAL DRAWINGS SHOW DESIGN INTENT. REFER TO SPECIFICATIONS FOR CONNECTION DESIGN, DETAILING, FABRICATION, AND ERECTION REQUIREMENTS.
4. CONNECT BEAMS FOR THE FORCES SHOWN; IF NO FORCE IS INDICATED, CONNECT NON COMPOSITE BEAMS FOR THE REACTION DUE TO MAXIMUM UNIFORMLY DISTRIBUTED LOAD CAPACITY OF THE BEAM IN BENDING, AND CONNECT COMPOSITE BEAMS FOR ONE AND A HALF TIMES THE REACTION DUE TO MAXIMUM UNIFORMLY DISTRIBUTED LOAD CAPACITY OF THE NON COMPOSITE SECTION IN BENDING.
5. DO NOT CUT HOLES OR OTHERWISE MODIFY STRUCTURAL MEMBERS ON SITE.
6. CLEAN SURFACES DOWN TO BARE METAL AND APPLY TWO COATS OF ZINC-RICH TOUCH-UP PAINT TO ANY GALVANIZED SURFACE THAT HAS BEEN DAMAGED OR FIELD WELDED.
7. IF STRUCTURAL STEEL IS IN DIRECT CONTACT WITH GROUND (E.I. COLUMN BASE IS NOT ENCASED IN CONCRETE), PROTECT WITH EPOXY PAINT.
8. PROVIDE ALL ERECTION BRACING REQUIRED TO KEEP THE STRUCTURE STABLE AND IN ALIGNMENT DURING CONSTRUCTION.
9. PROVIDE 40 MPa NON SHRINK GROUT UNDER BASE PLATES. DO NOT APPLY ANY LOADS TO THE STEELWORK BEFORE GROUT ACHIEVES SUFFICIENT STRENGTH.
10. DISTRIBUTE HANGER LOADS FROM MECHANICAL AND HEAVY ELECTRICAL SERVICES SUSPENDED FROM STEELWORK UNIFORMLY ALONG MEMBERS. ALTERNATE HANGER POSITION ON EITHER SIDE OF MEMBERS.
11. CONNECT HANGERS FOR MECHANICAL AND ELECTRICAL SERVICES AND OTHER NON STRUCTURAL ELEMENTS, AS WELL AS ELEMENTS REQUIRED FOR THEIR SEISMIC RESTRAINT IF REQUIRED, NOT TO CAUSE TWISTING OF STEEL MEMBERS OR EXCESSIVE BENDING OF MEMBER FLANGES.
12. DO NOT APPLY LATERAL LOADS TO MEMBERS UNLESS APPROVED BY THE CONSULTANT.
13. MOMENT CONNECTIONS ARE TO BE WELDED UNLESS NOTED ON OTHERWISE.

STEEL JOISTS

1. CONFORM TO CSA S16 AND CSA S136.
2. MATERIALS: TO CSA G40.21, ASTM A1085 OR ASTM A500.
3. DESIGN STEEL JOISTS FOR THE LOADS AND STIFFNESSES DESCRIBED ON THE STRUCTURAL DRAWINGS. IN ADDITION, DESIGN TOP AND BOTTOM JOIST CHORDS FOR 1.5 kN POINT LOAD APPLIED ANYWHERE ALONG THEIR LENGTH (UNLESS HIGHER LOAD IS INDICATED ON DRAWINGS). SEE PLANS FOR OTHER POINT LOADS, WALL LOADS, AND MECHANICAL LOADS. SEE TYPICAL DETAIL TS-MISC-02 FOR LOADS FROM ROOF ANCHORS.
4. DO NOT MODIFY STEEL JOISTS ON SITE.
5. TERMINATE BRIDGING BY ANCHORING TO FRAMING MEMBERS AND SUPPORTS, OR BY CROSS BRACED BRIDGING BAYS.
6. WHEN SUSPENDING VERTICAL LOADS FROM TOP OR BOTTOM JOIST CHORDS, DISTRIBUTE HANGERS UNIFORMLY ALONG JOISTS. DO NOT CAUSE TWISTING OF JOISTS OR JOIST CHORDS. EXTEND HANGER RODS BETWEEN DOUBLE ANGLE CHORDS WHERE POSSIBLE; OTHERWISE ATTACH USING ONLY CLAMPS OR U-BOLTS. IF THE APPLIED LOAD IS MORE THAN 1.5 kN, LOCATE SUSPENSION POINT NOT MORE THAN 100 (4") FROM JOIST PANEL POINT.
7. WHERE SEISMIC RESTRAINTS ARE REQUIRED FOR NON-STRUCTURAL ELEMENTS, APPLY LOADS IN THE PLANE OF THE JOISTS, AND DO NOT EXCEED 1.5kN. DO NOT APPLY CONCENTRATED MOMENTS.
8. DO NOT APPLY LATERAL LOADS TO ANY JOISTS.

ROOF & FLOOR DECK ASSEMBLIES

1. CONFORM TO CSA S136 FOR STEEL DECKING, AND TO CAST IN PLACE CONCRETE AND CONCRETE REINFORCEMENT NOTES.
2. STEEL DECK MATERIAL: TO ASTM A653/653M OR ASTM A792/792M, GRADE 230.
3. REQUIRED DECK DEPTH AND CORE NOMINAL THICKNESS ARE SHOWN ON DRAWINGS; PROVIDE DECK PROFILE TO MEET THE LOADING AND PERFORMANCE REQUIREMENTS OUTLINED IN THE SPECIFICATIONS.
4. IF DIAPHRAGM SHEAR AND / OR DECK FASTENERS ARE NOT NOTED ON PLAN, MINIMUM DECK FASTENING REQUIREMENTS ARE AS FOLLOWS:

   TRANSVERSE (FRAME) FASTENERS

   19 (3/4") DIAMETER ARC SPOT WELDS, OR HILTI DIRECT FASTENERS PLACED IN EVERY SECOND FLUTE (FOR DECKS WITH FLUTE SPACING OF 200 (8") OR LESS) OR IN EVERY FLUTE (FOR DECKS WITH FLUTE SPACING OF OVER 200 (8")). IN ADDITION, PLACE TWO FASTENERS IN FLUTES WHERE SIDE LAPS ARE MADE; AT INTERLOCKING JOINTS, LOCATE ONE FASTENER AT EACH SIDE OF LAP. ***[FOR GALVANIZED AND PREFINISHED DECK, USE #10 STAINLESS STEEL SCREWS INSTEAD OF WELDING AND PAFs.]***.

   LONGITUDINAL (PERIMETER) FASTENERS

   TYPE TO MATCH TRANSVERSE FASTENERS, SPACED AT 450 (18") ON CENTRE

   SIDELAPS

   MECHANICALLY CLINCHED (BUTTON PUNCHED), WELDED OR FASTENED WITH #10 SCREWS, SPACED AT 600 (24") ON CENTRE. FOR GALVANIZED AND PREFINISHED DECK, USE ONLY #10 STAINLESS STEEL SCREWS..

5. STEEL ROOF DECK IS DESIGNED TO SUPPORT UNIFORMLY DISTRIBUTED LOADS INDICATED ON DRAWINGS AND MAY NOT BE ABLE TO RESIST CONCENTRATED LOADS. IF CEILING IS PROPOSED TO BE HUNG DIRECTLY FROM STEEL ROOF DECK, HANGER LOADS, LAYOUTS AND PROPOSED FASTENERS TO BE REVIEWED AND APPROVED BY A PROFESSIONAL ENGINEER RETAINED BY THE CONTRACTOR PRIOR TO INSTALLATION. DO NOT HANG ANY OTHER CONCENTRATED LOADS FROM STEEL ROOF DECK, ATTACH TO STRUCTURAL STEEL FRAMING INSTEAD.
6. DECK SUPPLIER TO DESIGN AND PROVIDE REINFORCING FOR ALL ROOF DECK OPENINGS BETWEEN 150 AND 450 WIDE, REFER TO ARCHITECTURAL AND MECHANICAL DRAWINGS FOR LOCATIONS. CLEAR SPACING BETWEEN ADJACENT OPENINGS TO BE MIN. 3 TIMES THE WIDTH OF THE LARGER OPENING.
7. METAL ROOF DECKING FOR THE TRUCK CANOPY SHALL BE CELLULAR 1-1/2" DEPTH BP TYPE, 20GA

SPECIAL INSPECTIONS:

1. SPECIAL INSPECTIONS SHALL BE IN ACCORDANCE WITH THE 2020 NATIONAL BUILDING CODE OF CANADA.
2. SPECIAL INSPECTION REPORTS SHALL BE FURNSHED TO THE BUILDING OFFICIAL, OWNER, STRUCTURAL EOR, AND CONTRACTOR. DISCREPANCIES SHALL BE BROUGHT TO THE ATTENTION OF THE CONTRACTOR, AND IF NOT CORRECTED, SHALL BE REPORTED TO THE BUILDING OFFICIAL, OWNER, ARCHITECT, AND STRUCTURAL EOR. SIGNED COPIES OF ALL TESTS AND INSPECTION REPORTS SHALL BE FILED WITH THE BUFFALO AND FORT ERIE PUBLIC BRIDGE AUTHORITY THROUGH THE APPLICANT.
3. THE SPECIAL INSPECTOR SHALL SUBMIT A FINAL REPORT STATING THAT THE STRUCTURAL WORK WAS, TO THE BEST OF THE SPECIAL INSPECTOR'S KNOWLEDGE, PERFORMED IN ACCORDANCE WITH THE CONTRACT DOCUMENTS.
4. THE FOLLOWING ITEMS OF WORK, AS APPROPRIATE, SHALL BE SUBJECTED TO CONTROLLED INSPECTIONS PER THE PROVINCE OF ONTARIO, NATIONAL BUILDING CODE OF CANADA AND THE CONTRACT DOCUMENTS:
   - A. FOUNDATIONS
     - A.1 SUBGRADE FOR FOUNDATIONS
     - A.2 SUITABLE FILL
   - B. CONCRETE CONSTRUCTION
     - B.1 STRENGTH TESTS
     - B.2 REINFORCEMENT
     - B.3 PLACEMENT
     - B.4 FORMWORK
     - B.5 MIX DESIGN
   - C. STEEL CONSTRUCTION
     - C.1 WELDING
     - C.2 HIGH STRENGTH BOLTS
     - C.3 DECK FASTENING
     - C.4 ERECTION
   - D. STABILITY AND INTEGRITY OF PROPOSED STRUCTURES

MARK	DESCRIPTION	DATE	APPR

DISCLAIMER

IT IS A VIOLATION OF THE LAW FOR ANY PERSON, UNLESS ACTING UNDER THE DIRECT SUPERVISION OF A LICENSED ARCHITECT OR ENGINEER, TO ALTER ANYTHING IN ANY WAY. IF ALTERATION BEARING THE SEAL OF AN ARCHITECT OR ENGINEER IS ISSUED, THE PERSON ALTERING ARCHITECT OR ENGINEER SHALL AFFIX TO THEIR ITEM THE WORDS "ALTERED BY" FOLLOWED BY THEIR SIGNATURE AND THE DATE OF SUCH ALTERATION AND A SPECIFIC DESCRIPTION OF THE ALTERATION.

DESIGNED BY: A. Hossainy
DWN BY: A. Hossainy
SUBMITTED BY:
CKD BY: Checker
DATE: 08/01/2024
SOLICITATION NO.:
CONTRACT NO.: 187928
FILE NAME: BIM 360://BuF-DD-SO000341 - Peace Bridge GEC - RD/SP/AEC 1.0 - Structural 2021.rvt
SIZE: 22" X 34"
PLOTTED BY:
PLOT DATE: 08/01/2024

BUFFALO AND FORT ERIE PUBLIC BRIDGE AUTHORITY
xx

WSP CAN, Inc.
1 Robert Speck Pkwy
Suite 750
Mississauga, ON L4Z 1S1
(416) 943-1230

BUFFALO AND FORT ERIE PUBLIC BRIDGE AUTHORITY
PROJECT# XXX PARE 3.0

STRUCTURAL NOTES 2/3

CROSSING PATHS ★ BUILDING FUTURES
THE PEACE BRIDGE

DRAWING NUMBER
SG002

STRUCTURAL DESIGN LOADS

		TRUCK CANOPY	SALT BARN
DEAD LOADS	ROOF	25 PSF	20 PSF
	PARTITION WALLS - CONCRETE	N/A	N/A
LIVE LOADS			
	ROOF	20 PSF	20 PSF
	SNOW		
	CATEGORY/IMPORTANCE Is	III / 1.1	II / 1.0
	GROUND Pg	50 PSF	50 PSF
	EXPOSURE Ce	0.8	0.8
	THERMAL Ct	1.2	1.2
	FLAT ROOF Pf	46 PSF	46 PSF
	DRIFTING	N/A	N/A
	WIND		
	CATEGORY	III	II
	BASIC WIND SPEED V s	116 MPH	116 MPH
	EXPOSURE	B	B
	MAX. MWFRS PRESSURE	±38 PSF	±38 PSF
	MAX. COMPONENTS & CLADDING	N/A	N/A
	RAIN		
	INTENSITY	2.5 IN/HR	2.5 IN/HR
	SEISMIC		
	RISK CATEGORY/IMPORTANCE Ie	III / 1.25	III / 1.25
	Ss / Sds	0.159g / 0.170g	0.159g / 0.170g
	SEISMIC RESPONSE COEFFICIENT Cs	0.17	0.17
	SEISMIC BASE SHEAR	20 KIPS	10 KIPS
	S1 / Sd1	0.044g / 0.070g	0.044g / 0.070g
	SITE CLASS	D ASSUMED	D ASSUMED
	SEISMIC DESIGN CATEGORY (0.2s)	B	B
	BASIC SEISMIC FORCE RESISTING SYSTEM	CONCRETE ORDINARY CANTILEVERED COLUMN SYSTEM	STEEL ORDINARY MOMENT FRAMES SYSTEM
	RESPONSE MODIFICATION FACTOR R	1.0	3.5
	ANALYSIS PROCEDURE	EQ. LAT. FORCE	EQ. LAT. FORCE

GEOTECHNICAL DATA

ALLOWABLE BEARING PRESSURE	4000 PSF ASSUMED

REFERENCED CODES

NATIONAL BUILDING CODE OF CANADA 2020

DEMOLITION NOTES:

1. PROVIDE ALL LABOR, EQUIPMENT AND SERVICES FOR ALL DEMOLITION WORK, INCLUDING PROTECTION OF EXISTING ELEMENTS TO REMAIN AND REMOVAL FROM SITE.
2. DRAWINGS ARE USED TO CONVEY EXTENT OF DEMOLITION WHERE EVER POSSIBLE.
3. STORE ANY ITEMS REMOVED AND SALVAGED FOR REUSE DURING DEMOLITION AND CONSTRUCTION. NECESSARY PRECAUTIONS SHALL BE TAKEN TO ALLOW REUSE OF SPECIFIED ITEMS.
4. PREMISES SHALL BE MAINTAINED FREE OF ALL DEBRIS AT THE COMPLETION OF DAILY WORK.
5. WHERE WALLS, FLOORS OR PARTITIONS ARE TO BE REMOVED, THE CONTRACTOR SHALL PROVIDE ADEQUATE SCAFFOLDING AND TEMPORARY STRUCTURAL SUPPORT TO MAINTAIN THE INTEGRITY OF REMAINING WALL, PARTITION OR ASSOCIATED CONSTRUCTION. PROVIDE SHORING PLANS SEALED BY A PROFESSIONAL ENGINEER LICENSED IN ONTARIO.
6. REMOVE ALL OUTLET, ABANDONED DUCTWORK, FIXTURES AND APPURTENANCES FOUND WITHIN AND/OR MOUNTED ON EXISTING CONSTRUCTION THAT IS TO BE REMOVED. CAP OR OTHERWISE PROPERLY TERMINATE UTILITIES AT EXTENTS OF DEMOLITION.
7. PATCH AND SMOOTH ALL SURFACES FLUSH TO MATCH EXISTING WALLS, CEILINGS, ETC.. PREPARE SURFACES TO RECEIVE FINAL FINISHES.
8. EXISTING STRUCTURE SHALL REMAIN THROUGH OUT UNLESS NOTED OTHERWISE.
9. INSTALL TEMPORARY DOORS, WINDOWS AND WALLS AS REQUIRED FOR PROTECTION OF THE PREMISES DURING THE DEMOLITION AND CONSTRUCTION OF THE PROJECT.
10. THE CONTRACTOR SHALL NOTIFY THE ENGINEER AND OWNER OF ANY HISTORICAL ELEMENTS FOUND WITHIN THE EXISTING BUILDING INCLUDING BUT NOT LIMITED TO DOCUMENTS, DRAWINGS, FIXTURES, ETC. THAT MAY OR MAY NOT BE INDICATED ON THE DRAWINGS.
11. MAINTAIN ALL BUILDING EGRESS DURING THE COURSE OF WORK.
12. COORDINATE SCHEDULE OF WORK WITH THE PEACE BRIDGE AUTHORITY, CBP, OTHER TRADES OR UNDER OTHERS CONTRACTS, SCHEDULE OF ACCESS, LOADING AND DELIVERIES, ETC.

LIGHT GAGE METAL FRAMING

1. SEE FRAMING PLANS AND DETAILS FOR LOCATION AND DIMENSIONS OF ALL LIGHT GAGE METAL FRAMING.
2. THE LAYOUT SHOWN IS THE RECOMMENDED SCHEME. FINAL SIZES, LOCATIONS, AND DETAILS ARE TO BE SHOWN IN THE SHOP DRAWINGS FOR REVIEW AND APPROVAL.
3. ALL METAL STUDS SHALL BE MINIMUM 6" 18 GAGE AND CONFORM TO SSMA SPECIFICATIONS. (UNLESS NOTED OTHERWISE ON THE STRUCTURAL DRAWINGS).
4. DETAILED SHOP DRAWINGS MUST BE SUBMITTED TO THE ENGINEER FOR REVIEW. DRAWINGS SHALL INCLUDE ALL AREAS OF INSTALLATION AND CONNECTIONS TO THE STRUCTURE.
5. ALL 12, 14, AND 16 GAGE LIGHTWEIGHT STEEL FRAMING MEMBERS SHALL SATISFY THE REQUIREMENTS OF ASTM A446 GRADE D, WITH A MINIMUM YIELD STRENGTH OF 50,000 P.S.I. ALL 18 GAGE LIGHTWEIGHT STEEL FRAMING MEMBERS SHALL BE MANUFACTURED FROM STEEL FABRICATED IN ACCORDANCE WITH ASTM A446, GRADE B, WITH A MINIMUM YIELD STRENGTH OF 37,000 P.S.I. MEMBERS 20 GAGE AND LIGHTER SHALL BE MANUFACTURED FROM STEEL CONFORMING TO ASTM A446 WITH A MINIMUM YIELD STRENGTH OF 33,000 P.S.I., ALL AS SET FORTH IN THE LATEST EDITION OF THE A.I.S.I. "SPECIFICATIONS FOR THE DESIGN OF COLD-FORMED STEEL STRUCTURAL MEMBERS".
6. ALL MATERIALS SHALL BE HOT-DIPPED GALVANIZED STEEL FOR GREATER CORROSION RESISTANCE, CONFORMING TO FEDERAL SPECIFICATION QQS-775, TYPE 1, CLASS D AND ASTM A525.
7. ALL FIELD ABRASIONS TO MEMBERS FROM WELDING SHALL BE TOUCHED UP WITH A ZINC RICH PAINT.
8. CONNECTIONS OF LIGHT STEEL FRAMING MEMBERS SHALL BE BY SELF DRILLING SCREWS OR BY WELDING IN STRICT ACCORDANCE WITH THE MANUFACTURERS' REQUIREMENTS. WIRE TIEING OF FRAMING MEMBERS WILL NOT BE PERMITTED.
9. STUD BRIDGING REQUIREMENTS:
   UP TO 10'-0" IN HEIGHT: TWO ROWS OF BRIDGING, EQUALLY SPACED
   OVER 10'-0" IN HEIGHT: BRIDGING ROWS SPACED 3'-4" ON CENTER MAXIMUM.

LEGEND:

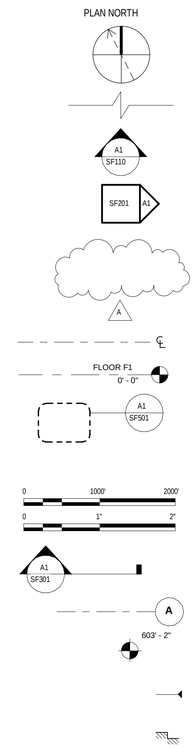

METAL STUD I.D.

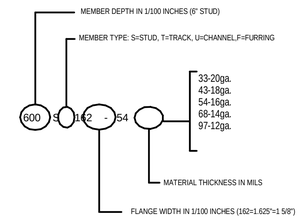

METAL DECK & CONCRETE SLAB SPAN DIRECTION

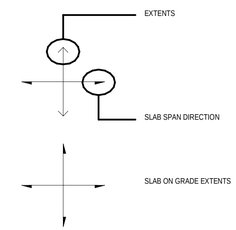

REINFORCEMENT DEVELOPMENT AND SPLICE LENGTHS

BAR SIZE	TENSION DEVELOPMENT		CLASS "B" SPLICE		COMPRESSION BAR		STANDARD 90 DEG. HOOKS	
	T & B BAR (IN.)	OTHER BAR (IN.)	TOP BAR (IN.)	OTHER BAR (IN.)	DEVELOPMENT (IN.)	SPLICE (IN.)	EMBEDMENT (IN.)	LEG LENGTH (IN.)
#3	15	22	19	28	8	12	8	5
#4	19	29	25	37	10	15	10	6
#5	24	36	31	47	12	19	12	8
#6	29	43	37	56	15	23	15	9
#7	42	63	54	81	17	27	17	11
#8	48	72	62	93	19	30	19	12

IT IS A VIOLATION OF THE LAW FOR ANY PERSON, UNLESS ACTING UNDER THE DIRECT SUPERVISION OF A LICENSED ARCHITECT OR ENGINEER, TO ALTER ANYTHING ON THIS DRAWING. IF AN ALTERATION IS MADE, THE ALTERING ARCHITECT OR ENGINEER SHALL AFFIX TO THEIR ITEM THE WORDS "ALTERED BY" FOLLOWED BY THEIR SIGNATURE AND THE TITLE, THE DATE OF SUCH ALTERATION AND A SPECIFIC DESCRIPTION OF THE ALTERATION.

DISCLAIMER

MARK	DESCRIPTION	DATE	APPR
A	ISSUED FOR BID (NOT FOR CONST.)	03/21/2024	

DESIGNED BY: Designer
DWN BY: Author
CKD BY: Checker
SUBMITTED BY:
DATE: 03/21/2024
SOLICITATION NO.:
CONTRACT NO.: 187928
FILE NAME: BIM 360://BuFort-D20-S0000141 - Peace Bridge GBC - RD25/PARE 3.0 - Structural R23.1.rvt
PLOTTED BY:
PLOT DATE: 2024/03/24
SIZE: 22" X 34"

WSP USA Inc.
1 Hospital Plaza, Suite 300
Buffalo, NY 14203
(716) 853-1220

BUFFALO AND FORT ERIE PUBLIC BRIDGE AUTHORITY

xx

BUFFALO AND FORT ERIE PUBLIC BRIDGE AUTHORITY
PROJECT# XXX PARE 3.0

STRUCTURAL NOTES 3/3

CROSSING PATHS ★ BUILDING FUTURES
THE PEACE BRIDGE

DRAWING NUMBER
SG003

DRAWING ABBREVIATIONS — TG-ABBR-01

ABUT	ABUTMENT
ACA	ADHESIVE CONCRETE ANCHORS, SEE GENERAL NOTES
ADD'L	ADDITIONAL
AEC	ARCHITECTURALLY EXPOSED CONCRETE
AESS	ARCHITECTURALLY EXPOSED STRUCTURAL STEEL
AIFB	ASPHALT IMPREGNATED FIBERBOARD
ALT	ALTERNATE
AMA	ADHESIVE MASONRY ANCHORS, SEE GENERAL NOTES
ARCH	ARCHITECTURAL
A-ROD	ANCHOR ROD
ASPH	ASPHALT
AVG	AVERAGE
B. BOT	BOTTOM
BCE	BOTTOM CHORD EXTENSION
BCP	BORED CONCRETE PILE
BEW	BOTTOM EACH WAY
BH	BOREHOLE
BLL	BOTTOM LOWER LAYER
BOF	BOTTOM OF FOOTING
BOP	BOTTOM OF PILE
BP	BASE PLATE
BRG	BEARING
BRP	BEARING PLATE
BSMT	BASEMENT
BUL	BOTTOM UPPER LAYER
BUP	BOTTOM OF UNDERPINNING
C	CAMBER
CA	COLUMN ABOVE ONLY (NO COLUMN BELOW)
CANT	CANTILEVER
CAT	CATEGORY (FOR AESS)
CB	COLUMN BELOW ONLY (NO COLUMN ABOVE)
CDL	COMPRESSION DEVELOPMENT LENGTH
CEL	CUT OFF ELEVATION FOR PILES
CIP	CAST-IN PLACE
CJ	CONTROL JOINT
CLR	CLEAR
CL	CENTRELINE
CMU	CONCRETE MASONRY UNITS
CNT	STEEL DECK CORE NOMINAL THICKNESS
COMP	COMPOSITE
COL	COLUMN
CONC	CONCRETE
CONT	CONTINUOUS
CONT'D	CONTINUED
CONST.J.	CONSTRUCTION JOINT
CP	CONNECTION PLATE
CPL	CAP PLATE
CS	COMPRESSION LAP SPLICE
COV	CLEAR COVER
C/W	COMPLETE WITH, CONNECT WITH
CWS	(SEE GENERAL NOTES)
CLS	(SEE GENERAL NOTES)
DCA	DRILLED CONCRETE ANCHOR, SEE GENERAL NOTES
DEMO	DEMOLITION
DET	DETAIL
D.FIR-L	DOUGLAS FIR-LARCH
DIA, Ø	DIAMETER
DIV	DIVIDER BEAM
DMA	DRILLED MASONRY ANCHOR, SEE GENERAL NOTES
DN	DOWN
DNW	DOUBLE NUT AND WASHER
DP	DEEP
DWG	DRAWING
DWL	DOWEL
EA	EACH
ECR	EPOXY COATED REINFORCEMENT
EBF	ECCENTRICALLY BRACED FRAME
EE	EACH END
EF	EACH FACE
EJ, EXP JT	EXPANSION JOINT
ELECT	ELECTRICAL
EL	ELEVATION
ELEV	ELEVATOR
EMBED	EMBEDMENT
ENG	ENGINEER
EOD	EDGE OF DECK
EOS	EDGE OF SLAB
ES	EACH SIDE
EQ	EQUAL
EW	EACH WAY
EX, EXIST	EXISTING
EXT	EXTERIOR
FC	FUTURE COLUMN
FD	FLOOR DRAIN
FF	FAR FACE
FIN	FINISHED
FL	FLOOR
FMC	FULL MOMENT CONNECTION (FOR FULL MOMENT CAPACITY)
FND	FOUNDATION
FTG	FOOTING
GA	GAUGE
GALV	GALVANIZED
GB	GRADE BEAM
GEN	GENERAL
GL	GRIDLINE
GRD	GROUND
h	TOTAL THICKNESS, SLAB THICKNESS AWAY FROM DROP PANEL
hd	SLAB OVERALL THICKNESS AT DROP PANEL
H, HORIZ	HORIZONTAL
(H)	HIGH BEAM
HC	HOLLOWCORE
HD	HOLD DOWN
HDG	HOT DIPPED GALVANIZED
HEF	HORIZONTAL EACH FACE
HIF	HORIZONTAL INSIDE FACE
HH	HOOK EACH END
HIC	HORIZONTAL IN CENTRE
HMA	HOLLOW MASONRY ANCHORS, SEE GENERAL NOTES
HOF	HORIZONTAL OUTSIDE FACE
HP	HIGH POINT
HSC	HORIZONTAL SLOTTED CONNECTION
IBI	INTEGRITY BARS INTERIOR
IBE	INTEGRITY BARS EXTERIOR
IBA	INTEGRITY BARS ADDED
IBB	INTEGRITY BOTTOM BARS (THROUGHOUT)
ID	INSIDE DIAMETER
INT	INTERIOR
IF	INSIDE FACE
JG	JOIST GIRDER
KB	KNEE BRACING
(L)	LOW BEAM
2-L	BACK TO BACK ANGLES
ℓd	TENSION DEVELOPMENT LENGTH OF REBAR
ℓdc	COMPRESSION DEVELOPMENT LENGTH OF REBAR
ℓdh	TENSION EMBEDMENT LENGTH WITH STANDARD HOOK
LE	LEFT END
LG	LONG
LL	LOWER LEVEL
LLH	LONG LEG HORIZONTAL
LLV	LONG LEG VERTICAL
LONG	LONGITUDINAL
LSH	LONG SIDE HORIZONTAL
LP	LOW POINT
LWT	LIGHT WEIGHT
MAX	MAXIMUM
MC	MOMENT CONNECTION ( )
MECH	MECHANICAL
MEZZ	MEZZANINE
MF	MOMENT FRAME
MIN	MINIMUM
MISC	MISCELLANEOUS
MJ	MOVEMENT JOINT
ML	MIDDLE LAYER
NF	NEAR FACE
NIC	NOT IN CONTRACT
NOM	NOMINAL
NTS	NOT TO SCALE
O/C	ON CENTER
OD	OUTSIDE DIAMETER
OF	OUTSIDE FACE
OPP	OPPOSITE
OWSJ	OPEN WEB STEEL JOIST
PAF	POWDER ACTUATED FASTENERS
PC	PILE CAP
PL	PLATE
PROJ	PROJECT, PROJECTION
PS	PIPE SUPPORT
PT	POST TENSIONED
PTL	PRESSURE TREATED LUMBER
R	RADIUS
RA	ROOF ANCHOR
RD	ROOF DRAIN
RDA	REBAR DOWEL ANCHORS, SEE GENERAL NOTES
RE	RIGHT END
REINF	REINFORCEMENT
REM	REMAINDER
REQ'D	REQUIRED
REV	REVISION
RF	RIGID FRAME
RL	REFERENCE LINE
RSS	RETAINED SOIL SYSTEM
RTU	ROOF TOP UNIT
RET. WALL	RETAINING WALL
R/W	REINFORCE WITH
r.w.	REQUIRED WITH
SDF	STEP DOWN FOOTING (IN DIRECTION OF ARROW)
SEC	SECTION
SIM	SIMILAR
SJ	STEEL JOIST
SL	SLAB, SHELF ANGLE
SLBB	SHORT LEG BACK TO BACK
SLS	SERVICEABILITY LIMIT STATE
SOG	SLAB-ON-GRADE
SPEC	SPECIFICATIONS
SPF	SPRUCE PINE FIR
SR	STUD RAIL
SS	STAINLESS STEEL
ST	STRAIGHT
STD	STANDARD
STE	SHEAR TRANSFER ELEMENTS
STG	STAGGERED
STIR	STIRRUP
STIFF	STIFFENER
STL	STEEL
STR	SEISMIC STRAP
STRUCT	STRUCTURAL
SWT	SELF WEIGHT
SYMM	SYMMETRICAL
t	THICKNESS
TB	TRANSFER BEAM
TBB	TOP BASIC BARS
T	TOP
TDL	TENSION DEVELOPMENT LENGTH
TEW	TOP EACH WAY
T&G	TONGUE AND GROOVE
TJ	TIE JOIST
TLL	TOP LOWER LAYER
T/O	TOP OF
TOB	TOP OF (GRADE) BEAM
TOC	TOP OF CONCRETE
TOF	TOP OF FOOTING
TOS	TOP OF STEEL
TOP	TOP OF PILE
TOW	TOP OF WALL
TPC	TOP OF PILE CAP
TRANS	TRANSVERSE
TSA	TENSION SPLICE "A"
TSB	TENSION SPLICE "B"
TUL	TOP UPPER LAYER
TYP	TYPICAL
U-BAR	"U" SHAPED BAR
UDB	UNIFORMLY DISTRIBUTED BARS
U/F	UNDERSIDE OF FOOTING
UL	UPPER LEVEL
ULS	ULTIMATE LIMIT STATE
U/S	UNDERSIDE
U/N, UNO	UNLESS NOTED OTHERWISE
UPT	UPTURNED
V, VERT	VERTICAL, VERTICALS
VB	VERTICAL BRACING
VEF	VERTICAL EACH FACE
VIF	VERTICAL INSIDE FACE
VIC	VERTICAL IN CENTRE
VOF	VERTICAL OUTSIDE FACE
VSC	VERTICALLY SLOTTED CONNECTION
WB	WALL BELOW
WC	WIND COLUMN
w/o	WITHOUT
WP	WORK POINT
WSP-S	WSP STRUCTURAL
WWF	WELDED WIRE FABRIC
ZRP	ZINC RICH PAINT
γ	CONCRETE DENSITY

DEC 2021

FOOTING AT CONCRETE COLUMN — TC-FDN-01

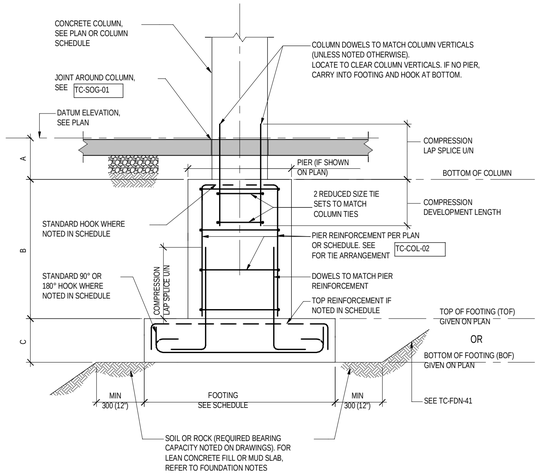

A - DISTANCE FROM DATUM ELEVATION TO BOTTOM OF COLUMN GIVEN ON COLUMN SCHEDULE (UNLESS TOP OF PIER ELEVATION IS GIVEN ON DRAWINGS). IF NO PIERS, CARRY COLUMNS TO TOP OF FOOTING.

B - DEPTH OF PIER (WHERE APPLICABLE) DETERMINED FROM BOTTOM OF COLUMN AND TOP / BOTTOM OF FOOTING ELEVATION.

C - DEPTH OF FOOTING GIVEN ON PLAN OR FOOTING SCHEDULE.

JUNE 2021

FOOTING AT STEEL COLUMN — TC-FDN-02

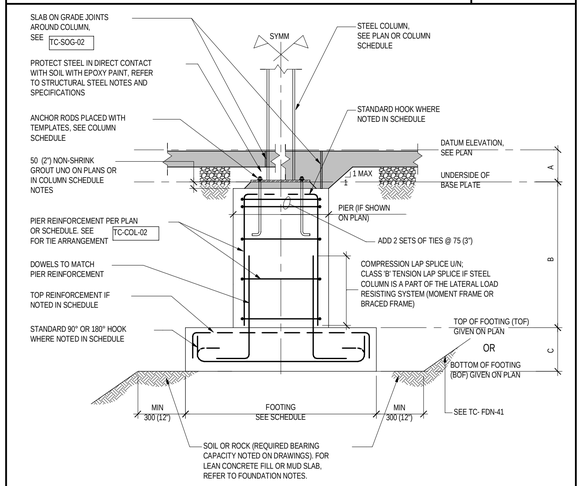

A - DISTANCE FROM DATUM ELEVATION TO UNDERSIDE OF BASE PLATE GIVEN ON COLUMN SCHEDULE (UNLESS TOP OF PIER ELEVATION IS GIVEN ON DRAWINGS).

B - DEPTH OF PIER DETERMINED FROM U/S OF BASE PLATE /TOP OF PIER AND TOP / BOTTOM OF FOOTING ELEVATION.

C - DEPTH OF FOOTING GIVEN ON PLAN OR IN FOOTING SCHEDULE.

JUNE 2021

LOADING ABBREVIATIONS — TG-ABBR-02

Af	FACTORED AXIAL LOAD IN kN (+ INDICATES TENSION, - INDICATES COMPRESSION)
Cf	FACTORED COMPRESSION IN kN
f'c	COMPRESSIVE STRENGTH OF CONCRETE, IN MPa
fy	YIELD STRENGTH IN MPa
Mf	FACTORED MOMENT IN kN.m
Mfx	FACTORED MOMENT ABOUT X-X (STRONG) AXES IN kN.m
Mfy	FACTORED MOMENT ABOUT Y-Y (WEAK) AXES IN kN.m
MPL	MASONRY PARTITION DEAD LOAD IN kN/m
MTf	FACTORED TORSION IN K.m
Rf	FACTORED VERTICAL REACTION IN kN
RHf	FACTORED HORIZONTAL REACTION IN kN
P	SPECIFIED (UNFACTORED) POINT LOAD IN kN
Pf	FACTORED POINT LOAD IN kN
Vf	FACTORED SHEAR IN kN
Tf	FACTORED TENSION IN kN
WT	WEIGHT OF MECHANICAL EQUIPMENT

JUNE 2021

INTERFACE OF FOOTINGS WITH DIFFERENT DEPTH — TC-FDN-31

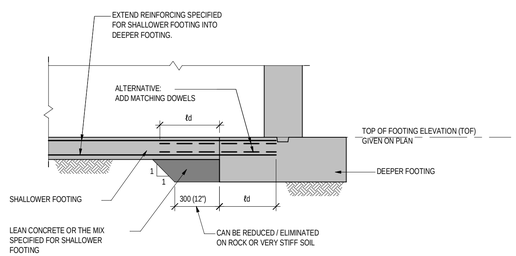

JUNE 2021

IT IS A VIOLATION OF THE LAW FOR ANY PERSON, UNLESS ACTING UNDER THE DIRECT SUPERVISION OF A LICENSED ARCHITECT OR ENGINEER, TO ALTER AN ITEM IN ANY WAY. IF AN ITEM BEARING THE SEAL OF AN ARCHITECT OR ENGINEER IS ALTERED, THE ALTERING ARCHITECT OR ENGINEER SHALL AFFIX TO THEIR ITEM THE SEAL AND A NOTATION SPECIFYING THE ITEM ALTERED, THEIR NAME, SIGNATURE AND THE DATE OF SUCH ALTERATION AND A SPECIFIC DESCRIPTION OF THE ALTERATION.

DISCLAIMER

MARK	DESCRIPTION	DATE	APPR

DESIGNED BY: Designer
DWN BY: Author
CKD BY: Checker
SUBMITTED BY:
DATE: 09/01/2024
SOLICITATION NO.:
CONTRACT NO.: 187928
FILE NAME: BIM 360/BUF-DO-30900041 - Peace Bridge GEC - RSDP-ME 3.0 - Discipline FDLX
SIZE: 22" X 34"
PLOTTED BY:
PLOT DATE: 09/01/2024

BUFFALO AND FORT ERIE PUBLIC BRIDGE AUTHORITY
xx

WSP USA Inc.
677 Main Street East
Buffalo, N.Y. 14202
(716) 849-1150

BUFFALO AND FORT ERIE PUBLIC BRIDGE AUTHORITY
PROJECT# XXX PARE 3.0

TYPICAL DETAILS

CROSSING PATHS ★ BUILDING FUTURES
THE PEACE BRIDGE

DRAWING NUMBER
SG004

PLACEMENT OF REINFORCEMENT IN RECTANGULAR FOOTING — TC-FDN-03

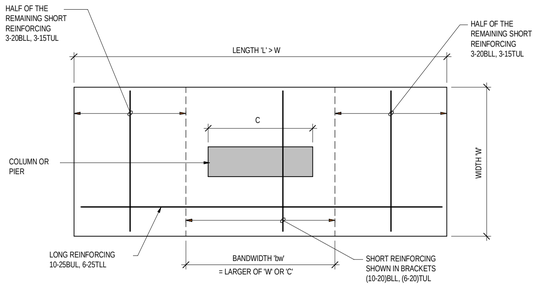

NOTES:

1. PLACE SHORT REINFORCEMENT SHOWN IN BRACKETS UNIFORMLY ACROSS THE BANDWIDTH 'bw'. SPACE HALF OF THE REMAINING SHORT REINFORCEMENT UNIFORMLY AT EACH SIDE OF THE BANDWIDTH. IF NO BARS ARE SHOWN IN BRACKETS, SPACE ALL BARS UNIFORMLY ACROSS THE FOOTING WIDTH.
2. PLACE LONG REINFORCEMENT UNIFORMLY ACROSS THE FOOTING WIDTH 'W'.

MARK	WIDTH	LENGTH	DEPTH	REINFORCEMENT	REMARKS
Fxx	1600	3200	600	10-25BUL, 6-25TLL (LONG) (10-20) + 6-20BLL, (6-20) + 6-15TUL (SHORT)	

JUNE 2019

SLAB ON GRADE CONSTRUCTION JOINTS — TC-SOG-03

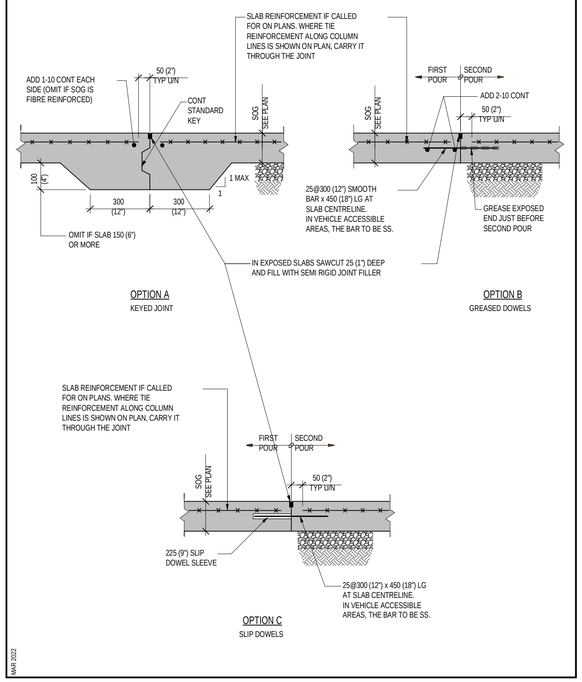

MAR 2022

SLOPE BETWEEN ADJACENT EXCAVATIONS — TC-FDN-41

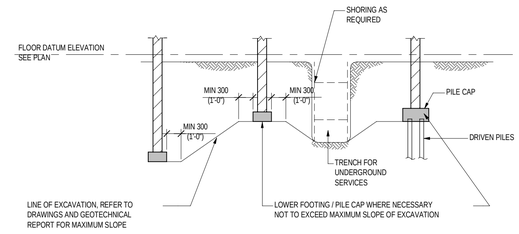

MAY 2017

SLAB ON GRADE SAWCUT CONTROL JOINT — TC-SOG-05

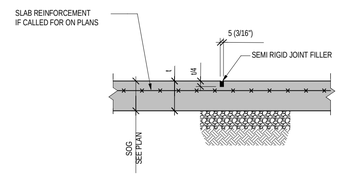

MAY 2017

SLAB ON GRADE JOINTS AROUND CONCRETE COLUMN — TC-SOG-01

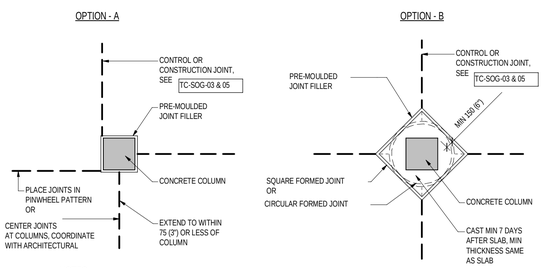

NOTES:

1. SUBMIT PROPOSED JOINT LAYOUT AND DETAILS FOR REVIEW BY ARCHITECT AND WSP-S.
2. DO NOT USE OPTION 'B' FOR SOG IN VEHICLE ACCESSIBLE AREAS.

JUNE 2019

SLAB ON GRADE STEP UP TO 300 (12") — TC-SOG-21

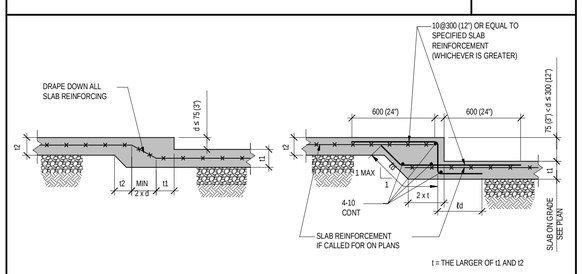

NOTE:

SEE TC-SOG-4 FOR DIAGONAL BARS ADDED AT CORNERS

OCT 2017

EXISTING SLAB ON GRADE INFILL — TC-SOG-51

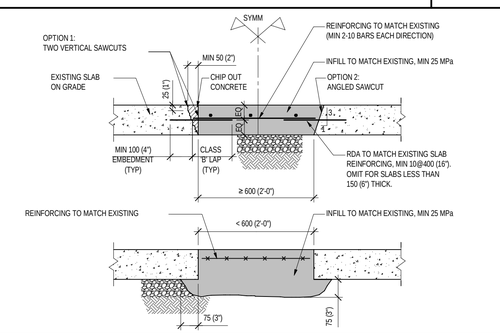

AUG 2022

CONCRETE PAD FOR EXTERIOR MECHANICAL UNITS — TC-SOG-62

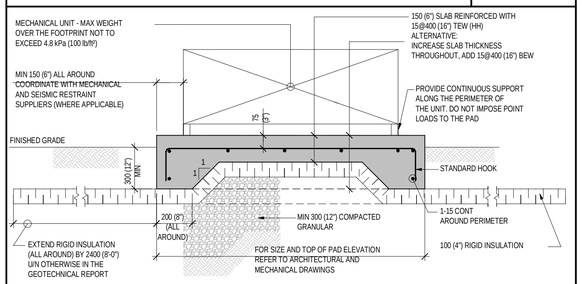

NOTE:

ALTERNATIVE FROST HEAVE PROTECTION MAY BE ACCEPTABLE IF SPECIFIED BY GEOTECHNICAL CONSULTANT

OCT 2023

IT IS A VIOLATION OF THE LAW FOR ANY PERSON, UNLESS ACTING UNDER THE DIRECT SUPERVISION OF A LICENSED ARCHITECT OR ENGINEER, TO ALTER ANYTHING ON THIS DOCUMENT. IF THIS DOCUMENT IS ALTERED, THE ALTERING ARCHITECT OR ENGINEER SHALL AFFIX TO THEIR ITEM THE SEAL AND/OR SIGNATURE AND THE DESCRIPTION OF THE ALTERATION AND THE DATE OF SUCH ALTERATION AND A SPECIFIC DESCRIPTION OF THE ALTERATION.

MARK	DESCRIPTION	DATE	APPR

DISCLAIMER

DESIGNED BY: Designer
DWN BY: Author
CKD BY: Checker
SUBMITTED BY:
DATE: DEC 2024
SOLICITATION NO.:
CONTRACT NO.: 187928
PLOTTED BY:
PLOT DATE: 08/01/2024
FILE NAME: BIM-SOG.dgn/J:\DO-\0000041 - Peace Bridge GEC - RDP\PARE 3.0 - Structural\01.rvt
SIZE: 22" X 34"

BUFFALO AND FORT ERIE PUBLIC BRIDGE AUTHORITY
xx

WSP USA Inc.
1600 Liberty Plaza
Suite 25
Buffalo, N.Y. 14202
(716) 852-1230

CROSSING BATHS ★ BUILDING FUTURES
THE PEACE BRIDGE

BUFFALO AND FORT ERIE PUBLIC BRIDGE AUTHORITY
PROJECT# XXX PARE 3.0

TYPICAL DETAILS

DRAWING NUMBER

SG005

COLUMN AND PIER CAST INTEGRALLY WITH WALL — TC-COL-21

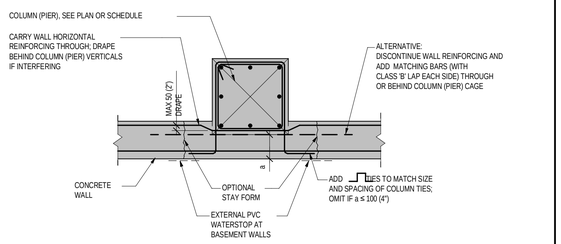

NOTE:

IF DIFFERENT CONCRETE MIXES ARE SPECIFIED FOR COLUMN (PIER) AND WALL, USE CONCRETE OF HIGHER STRENGTH AND MORE STRINGENT EXPOSURE CLASSIFICATION FOR BOTH. ALTERNATIVELY, PROVIDE STAY FORM AND POUR COLUMN AND WALL SEPARATELY.

JUNE 2017

CONCRETE COLUMN AND WALL PROTECTION IN VEHICLE ACCESIBLE AREAS — TC-COL-41

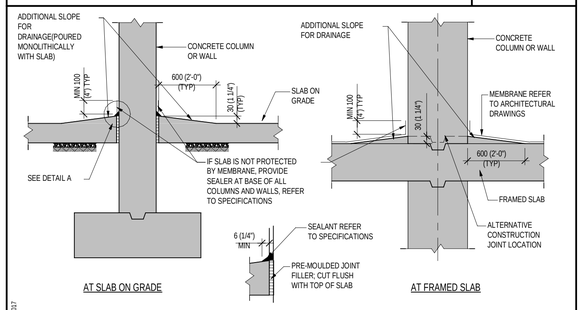

JUNE 2017

SAW CUTTING OF EXISTING SLAB OR WALL — TC-SL-71

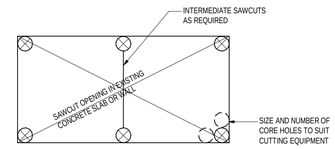

SAW CUTTING PROCEDURE:

NOTES:

1. OBTAIN ENGINEER'S APPROVAL BEFORE CUTTING ANY OPENINGS. IF REQUESTED, LOCATE REINFORCEMENT USING A NON- DESTRUCTIVE METHOD.
2. IF NEW REINFORCEMENT IS REQUIRED AT AN OPENING, INSTALL IT BEFORE CUTTING OR SHORE THE STRUCTURE UNTIL THE NEW REINFORCEMENT IS INSTALLED. DESIGN AND PROVIDE TEMPORARY SHORING AS REQUIRED.
3. CORE HOLES AT EACH CORNER AND AT ENDS OF EACH INTERMEDIATE SAWCUT.
4. SAWCUT AND DO NOT OVERCUT.
5. EXTEND SAWCUTS THROUGH FULL CONCRETE THICKNESS.
6. CHIP CORNERS SQUARE.

JAN 2024

ROOF DECK EDGE DETAILS — TS-DECK-22

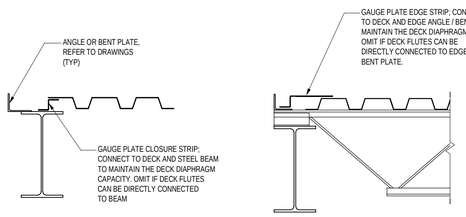

BEAM AT U/S OF DECK

BEAM SUPPORTING JOISTS AT BAYS WITHOUT SHEAR TRANSFER ELEMENTS (STE)

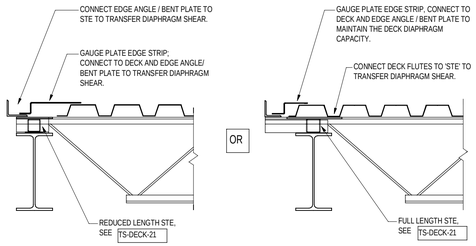

BEAM SUPPORTING JOISTS AT BAYS WITH SHEAR TRANSFER ELEMENT (STE)

JUNE 2021

STEEL DECK SUPPORT AT BEAM PARALLEL OR ANGLED TO DECK SPAN — TS-DECK-15

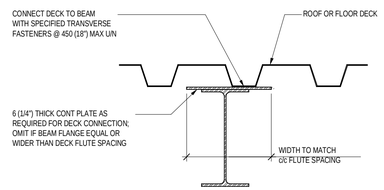

JUNE 2021

CONCRETE CURBS — TC-MISC-11

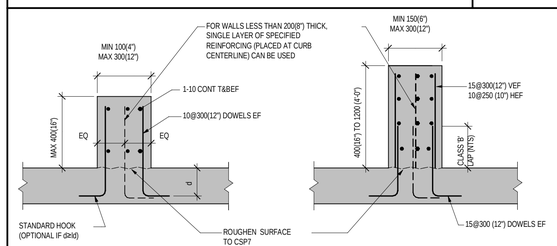

NOTE:

1. FOR CURB SIZES AND LOCATIONS, REFER TO ARCHITECTURAL AND MECHANICAL DRAWINGS.
2. UNLESS SPECIFICALLY NOTED, THIS DETAIL DOES NOT APPLY FOR CURBS SUPPORTING FALL ARREST ANCHORS OR WALL WITHOUT LATERAL SUPPORT AT TOP. REFER TO DRAWINGS FOR SPECIAL DETAILS.
3. FOR CURBS UP TO 400 (18") HIGH, IF BASE SLAB IS MIN 175 (7") THICK, RDAs OF EQUAL SIZE EMBEDDED 150 (6") DEEP CAN BE USED INSTEAD OF CAST IN DOWELS.

DEC. 2021

SKEWED BEAM CONNECTION TO COLUMNS — TS-BM-11

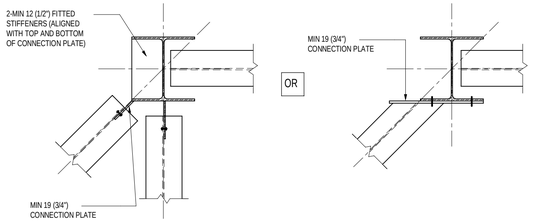

NOTES:

1. DESIGN CONNECTION PLATES AND STIFFENERS TO TRANSFER FORCES SHOWN ON DRAWINGS.
2. PROVIDE ADDITIONAL STIFFENERS AS REQUIRED BY CONNECTION DESIGN.

SEPT 2017

IT IS A VIOLATION OF THE LAW FOR ANY PERSON, UNLESS ACTING UNDER THE DIRECT SUPERVISION OF A LICENSED ARCHITECT OR ENGINEER, TO ALTER THIS DOCUMENT IN ANY WAY. IF ALTERATION IS MADE, THE ALTERING ARCHITECT OR ENGINEER SHALL AFFIX TO THEIR ITEM THE WORDS "ALTERED BY" FOLLOWED BY THEIR SIGNATURE AND THE DATE OF SUCH ALTERATION AND A SPECIFIC DESCRIPTION OF THE ALTERATION.

MARK	DESCRIPTION	DATE	APPR

DISCLAIMER

DESIGNED BY: Designer
DWN BY: Author
CKD BY: Checker
SUBMITTED BY:
DATE: 07/01/2024
SOLICITATION NO.:
CONTRACT NO.: 187928
FILE NAME: BIM 360://BUF-00-30000041 - Peace Bridge GEC - R22/Part 2 D 3 - Discipline R21.rvt
PLOTTED BY:
PLOT DATE: 08/01/2024
SIZE: 22" X 34"

BUFFALO AND FORT ERIE PUBLIC BRIDGE AUTHORITY

xx

WSP USA Inc.
8 Wyndham Drive
Suite 2A
Amherst, NY 14223
(716) 849-1120

BUFFALO AND FORT ERIE PUBLIC BRIDGE AUTHORITY PROJECT# XXX PARE 3.0

TYPICAL DETAILS

CROSSING FAITHS BUILDING FUTURES THE PEACE BRIDGE

DRAWING NUMBER

SG006

CONCRETE WALL CORNERS AND INTERSECTIONS — TC-WALL-01

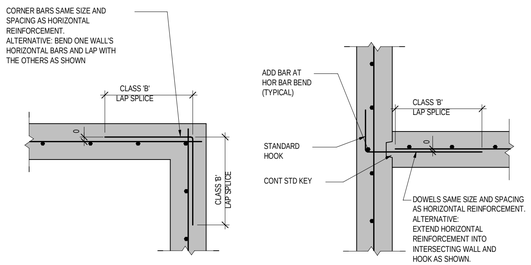

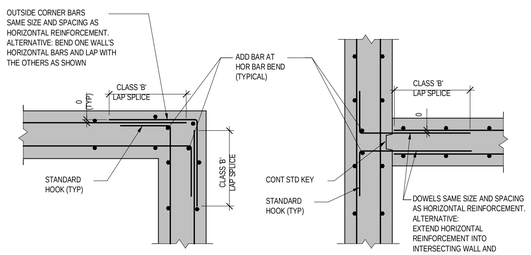

NOTES:

1. IF WALLS ARE NOT PERPENDICULAR TO EACH OTHER, ALL BAR BENDS TO MATCH THE WALL INTERSECTION ANGLE.
2. FOR SHEAR WALL CORNER AND INTERSECTION DETAILS, SEE TC-WALL-41 TO TC-WALL-43

JUNE 2017

CONCRETE WALL AT SLAB SUPPORT — TC-WALL-11

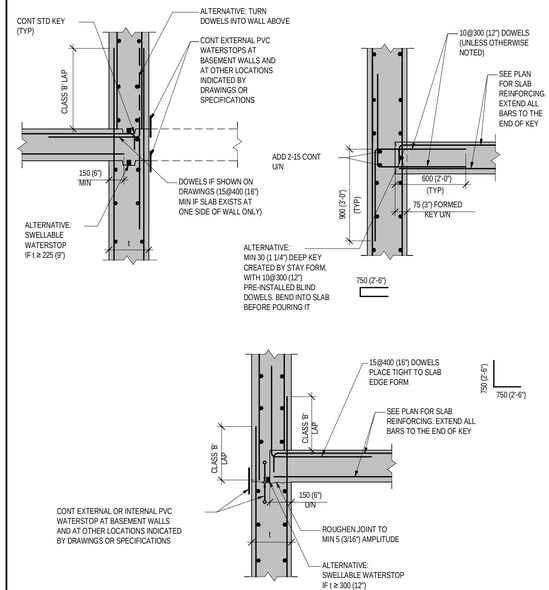

FEB 2020

CONSTRUCTION JOINT IN WALL — TC-WALL-21

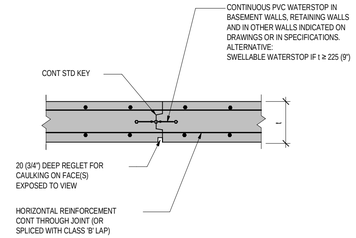

NOTE:

DO NOT PLACE CONSTRUCTION JOINTS IN ANY SHEAR WALLS.

FEB 2020

TENSION DEVELOPMENT LENGTHS AND LAP SPLICES FOR BARS GRADE 400 MPa — TC-REINF-01

TENSION DEVELOPMENT LENGTHS ℓd FOR GRADE 400 INDIVIDUAL BLACK BAR IN NORMAL DENSITY CONCRETE

BAR SIZE	fc = 25		fc = 30		fc = 35		fc = 40		fc = 50		fc = 60	
	BOTTOM	TOP	BOTTOM	TOP	BOTTOM	TOP	BOTTOM	TOP	BOTTOM	TOP	BOTTOM	TOP
10	300 (12")	380 (15")	300 (12")	350 (14")	300 (12")	320 (13")	300 (12")	300 (12")	300 (12")	300 (12")	300 (12")	300 (12")
15	440 (17 ")	570 (23")	400 (16")	520 (21")	370 (14")	480 (19")	350 (14")	450 (18")	310 (12")	400 (16")	300 (12")	370 (14")
20	580 (23")	750 (30")	530 (21")	690 (27")	490 (19")	640 (25")	460 (18")	600 (24")	410 (16")	530 (21")	380 (15")	490 (19")
25	900 (36")	1170 (46")	830 (32")	1070 (42")	770 (30")	990 (39")	720 (28")	930 (37")	640 (25")	830 (33")	590 (23")	760 (30")
30	1080 (43")	1410 (55")	990 (39")	1290 (51")	920 (36")	1190 (47")	860 (34")	1110 (44")	770 (30")	1000 (39")	700 (28")	910 (36")
35	1260 (50")	1640 (65")	1160 (46")	1500 (60")	1070 (42")	1390 (55")	1000 (40")	1300 (52")	900 (35")	1160 (46")	820 (32")	1060 (42")
45	1620 (64")	2110 (83")	1480 (58")	1930 (76")	1370 (54")	1780 (71")	1290 (51")	1670 (66")	1150 (46")	1490 (59")	1050 (42")	1360 (54")
55	1980 (78")	2580 (102")	1810 (72")	2350 (93")	1680 (66")	2180 (86")	1570 (62")	2040 (81")	1410 (56")	1820 (72")	1280 (51")	1670 (66")

CLASS B TENSION LAP SPLICE LENGTHS FOR GRADE 400 INDIVIDUAL BLACK BAR IN NORMAL DENSITY CONCRETE

BAR SIZE	fc = 25		fc = 30		fc = 35		fc = 40		fc = 50		fc = 60	
	BOTTOM	TOP	BOTTOM	TOP	BOTTOM	TOP	BOTTOM	TOP	BOTTOM	TOP	BOTTOM	TOP
10	390 (16")	490 (19")	390 (16")	450 (18")	390 (16")	420 (17")	390 (16")	390 (16")	390 (16")	390 (16")	390 (16")	390 (16")
15	570 (23")	740 (29")	520 (21")	670 (27")	480 (19")	620 (25")	450 (18")	580 (23")	400 (16")	520 (20")	390 (16")	480 (19")
20	750 (29")	980 (39")	690 (27")	890 (35")	640 (25")	830 (33")	600 (24")	770 (30")	530 (21")	690 (27")	490 (19")	630 (25")
25	1170 (46")	1530 (61")	1070 (42")	1390 (55")	990 (39")	1290 (51")	930 (37")	1210 (48")	830 (33")	1080 (43")	760 (30")	990 (39")
30	1410 (56")	1830 (72")	1290 (51")	1670 (66")	1190 (47")	1550 (61")	1110 (44")	1450 (57")	1000 (39")	1300 (51")	910 (36")	1180 (46")
35	1640 (65")	2130 (84")	1500 (60")	1950 (77")	1390 (55")	1800 (72")	1300 (52")	1690 (67")	1160 (46")	1510 (59")	1060 (42")	1380 (54")

- FOR EPOXY BARS MULTIPLY VALUES IN TABLE BY 1.5 EXCEPT THAT A MULTIPLIER OF 1.2 CAN BE USED WHEN CLEAR COVER IS MORE THAN 3x BAR DIAMETER AND CLEAR SPACING BETWEEN BARS IS MORE THAN 6x BAR DIAMETER.
- FOR SEMI LOW DENSITY CONCRETE (1850< c ≤ 2150 kg/m³) MULTIPLY VALUES IN TABLE BY 1.2. FOR LOW DENSITY CONCRETE (c ≤ 1850 kg/m³) MULTIPLY VALUES IN TABLE BY 1.3.
- FOR BUNDLED BARS, MULTIPLY VALUES IN TABLE BY 1.1 FOR A TWO BAR BUNDLE, 1.2 FOR A THREE BAR BUNDLE AND 1.33 FOR A FOUR BAR BUNDLE
- "TOP" MEANS THAT THERE IS MORE THAN 300 (12") OF CONCRETE BELOW, AND LESS THAN 300 (12") OF CONCRETE ABOVE THE HORIZONTAL BAR WITHIN THE INDIVIDUAL CONCRETE POUR. ALL HORIZONTAL BARS IN WALLS TO BE CONSIDERED "TOP".
- ALL VERTICAL BARS ARE CONSIDERED "BOTTOM"

CONTROL JOINT IN WALL — TC-WALL-22

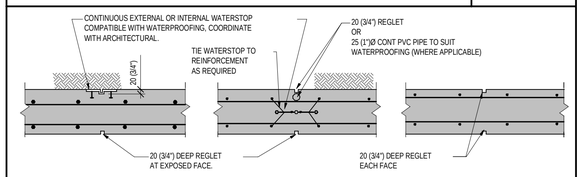

BASEMENT WALLS, RETAINING WALLS AND OTHER WALLS WHERE WATERSTOPS ARE INDICATED BY DRAWINGS OR SPECIFICATIONS

WALLS WITHOUT WATERSTOPS.

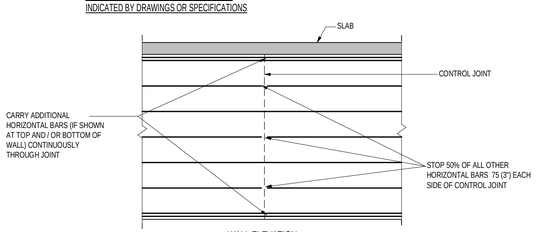

WALL ELEVATION

DO NOT LOCATE CONTROL JOINTS IN ANY SHEAR WALLS NOR IN BASEMENT WALL SEGMENTS SPANNING HORIZONTALLY AND HIGHLIGHTED THUS ON PLAN BELOW (h IS BASEMENT WALL CLEAR HEIGHT)

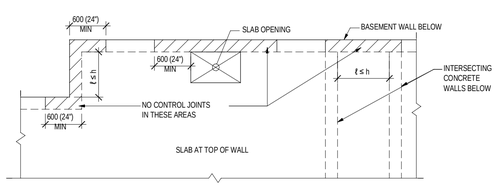

PLAN (NTS)

FEB 2020

COMPRESSION DEVELOPMENT LENGTHS AND LAP SPLICES FOR BARS GRADE 400 MPa — TC-REINF-02

COMPRESSION DEVELOPMENT LENGTH ℓdc FOR GRADE 400 INDIVIDUAL BARS

BAR SIZE	fc = 25	fc = 30 AND HIGHER
10	220 (9")	200 (8")
15	310 (12")	280 (11")
20	370 (15")	350 (14")
25	480 (19")	440 (17")
30	570 (23")	530 (21")
35	690 (27")	630 (25")
45	864 (34")	790 (31")
55	1070 (42")	970 (38")

COMPRESSION LAP SPLICE FOR GRADE 400 INDIVIDUAL BARS

BAR SIZE	STANDARD LAP
10	300 (12")
15	440 (17")
20	590 (23")
25	730 (29")
30	880 (35")
35	1030 (41")

-FOR BUNDLED BARS, MULTIPLY VALUES IN TABLE BY 1.1 FOR A TWO BAR BUNDLE, 1.2 FOR A THREE BAR BUNDLE AND 1.33 FOR A FOUR BAR BUNDLE

JUNE 2021

CONCRETE COVER — TC-REINF-21

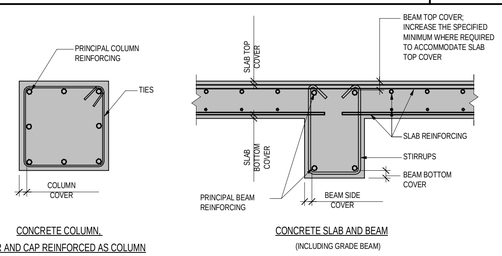

CONCRETE COLUMN, PIER AND CAP REINFORCED AS COLUMN

CONCRETE SLAB AND BEAM (INCLUDING GRADE BEAM)

NOTES:

1. SEE CONCRETE REINFORCEMENT NOTES FOR MINIMUM COVER REQUIREMENTS.
2. FOR WALLS AND SLABS, "PRINCIPAL" REINFORCING IS THE ONE CLOSEST TO THE CONCRETE SURFACE (AT EACH SIDE OF WALL / SLAB)

JUNE 2019

MINIMUM TENSION EMBEDMENT LENGTHS WITH STANDARD END HOOKS ℓdh, FOR GRADE 400 BAR IN NORMAL WEIGHT CONCRETE

BAR SIZE	fc = 25	fc = 30	fc = 35	fc = 40	fc = 50	fc = 60
10	150 (6")	150 (6")	150 (6")	150 (6")	150 (6")	150 (6")
15	210 (8")	200 (8")	180 (7")	170 (7")	150 (6")	150 (6")
20	280 (11")	260 (10")	240 (10")	230 (9")	190 (8")	190 (8")
25	350 (14")	320 (13")	300 (12")	280 (11")	240 (9")	230 (9")
30	420 (17")	390 (16")	360 (14")	340 (14")	290 (11")	280 (11")
35	490 (20")	450 (18")	420 (17")	390 (16")	340 (13")	320 (13")

- FOR EPOXY BARS MULTIPLY VALUES IN TABLE BY 1.2
- FOR LOW DENSITY CONCRETE (c ≤ 1850 kg/m³) MULTIPLY VALUES IN TABLE BY 1.3
- FOR HOOKS WITH COVER LESS THAN SHOWN IN DETAILS 'A', 'B' AND 'C' MULTIPLY VALUES IN TABLE BY 1.5

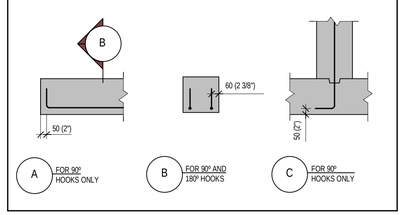

FOR VALUES NOT PROVIDED IN TABLES INTERPOLATE BETWEEN THE NEAREST VALUES PROVIDED.

JUNE 2017

IT IS A VIOLATION OF THE LAW FOR ANY PERSON, UNLESS ACTING UNDER THE DIRECT SUPERVISION OF A LICENSED ARCHITECT OR ENGINEER, TO ALTER AN ITEM IN ANY WAY. IF AN ITEM BEARING THE SEAL OF AN ARCHITECT OR ENGINEER IS ALTERED, THE ALTERING ARCHITECT OR ENGINEER SHALL AFFIX TO THEIR ITEM THE WORDS "ALTERED BY" FOLLOWED BY THEIR SIGNATURE AND THE DATE OF SUCH ALTERATION AND A SPECIFIC DESCRIPTION OF THE ALTERATION.

MARK	DESCRIPTION	DATE	APPR

DISCLAIMER

DESIGNED BY: Designer
DWN BY: Author
CKD BY: Checker
SUBMITTED BY:
FILE NAME: BIM 360://BUF-GO-30000-01 - Peace Bridge GEC - RIDP\PARE 3.0 - Structural R21.1.rvt
SIZE: 22" X 34"
PLOTTED BY:
DATE: 07/02/2024
SOLICITATION NO.:
CONTRACT NO.: 187928
PLOT DATE: 08/01/2024

WSP USA Inc.
1 Penn Plaza, 9th Floor
Suite 914
New York, NY 10119
(716) 783-1120

BUFFALO AND FORT ERIE PUBLIC BRIDGE AUTHORITY
xx

BUFFALO AND FORT ERIE PUBLIC BRIDGE AUTHORITY
PROJECT# XXX PARE 3.0

TYPICAL DETAILS

CROSSING PATHS BUILDING FUTURES THE PEACE BRIDGE

DRAWING NUMBER

SG007

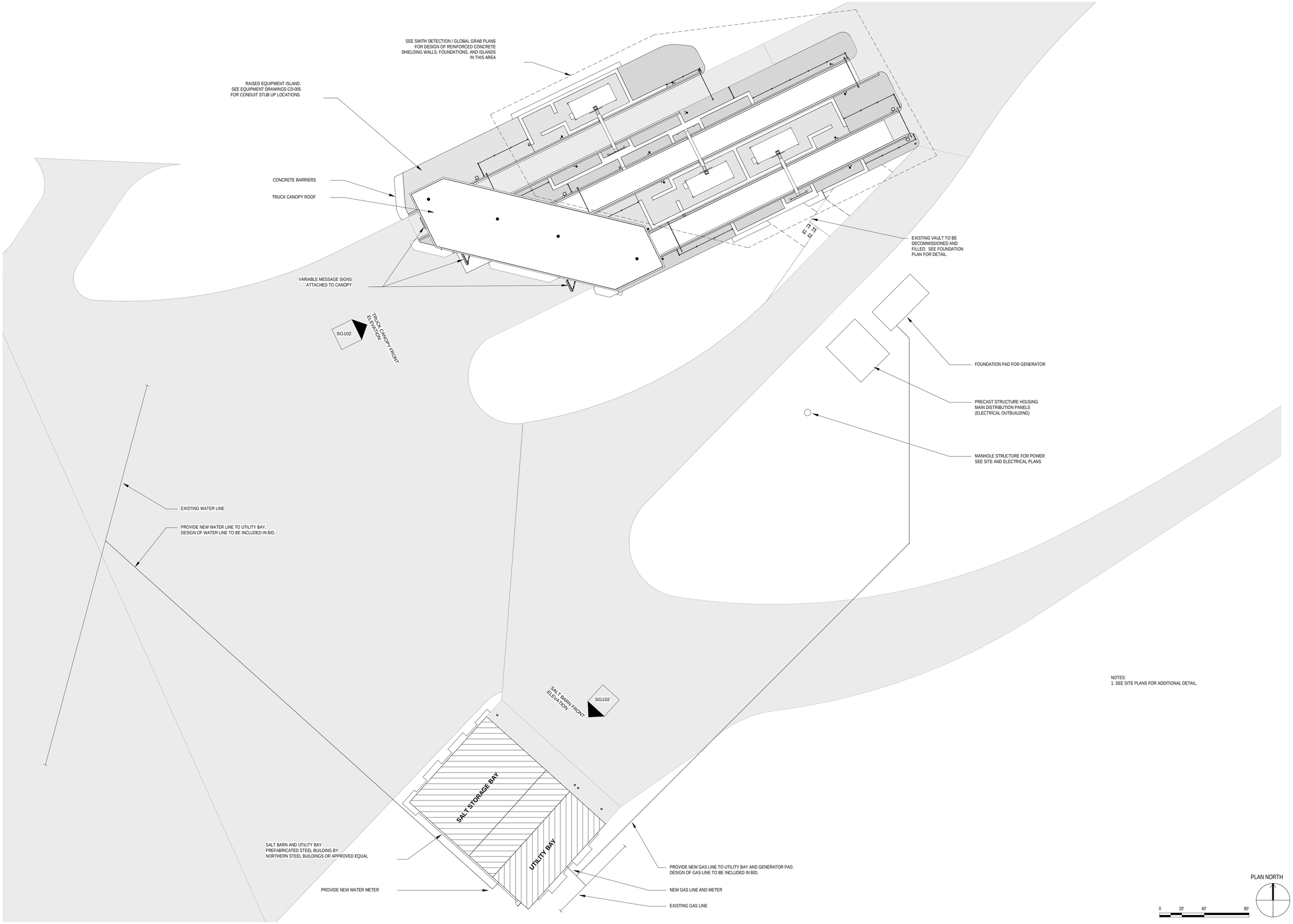

NOTES:
1. SEE SITE PLANS FOR ADDITIONAL DETAIL.

IT IS A VIOLATION OF THE LAW FOR ANY PERSON, UNLESS ACTING UNDER THE DIRECT SUPERVISION OF A LICENSED ARCHITECT OR ENGINEER, TO ALTER AN ITEM IN ANY WAY. IF AN ITEM BEARING THE STAMP OF AN ARCHITECT OR ENGINEER IS ALTERED, THE ALTERING ARCHITECT OR ENGINEER SHALL AFFIX TO THEIR ITEM THE STAMP AND THE WORDS "ALTERED BY" FOLLOWED BY THEIR SIGNATURE AND THE DATE OF SUCH ALTERATION AND A SPECIFIC DESCRIPTION OF THE ALTERATION.

DISCLAIMER

MARK	DESCRIPTION	DATE	APPR
A	ISSUED FOR BID (NOT FOR CONST.)	03/21/2024	

DESIGNED BY: A. Hussainy
DWN BY: A. Hossainy
CKD BY: Checker
SUBMITTED BY:
DATE: 03/21/2024
SOLICITATION NO.:
CONTRACT NO.: 187928
FILE NAME: BIM 360://BuFO/D-30000041 - Peace Bridge GEC - RD25/PARE 3.0 - Discipline/01.Arc
PLOTTED BY:
PLOT DATE: 03/01/2024
SIZE: 22" X 34"

BUFFALO AND FORT ERIE PUBLIC BRIDGE AUTHORITY

xx

WSP USA Inc.
1 Penn Plaza, Suite 2010
Suite 2010
New York, N.Y. 10119
(212) 632-1230

BUFFALO AND FORT ERIE PUBLIC BRIDGE AUTHORITY
PROJECT# XXX PARE 3.0

KEY PLAN

CROSSING FAITH'S BUILDING FUTURES
THE PEACE BRIDGE

DRAWING NUMBER
SG101

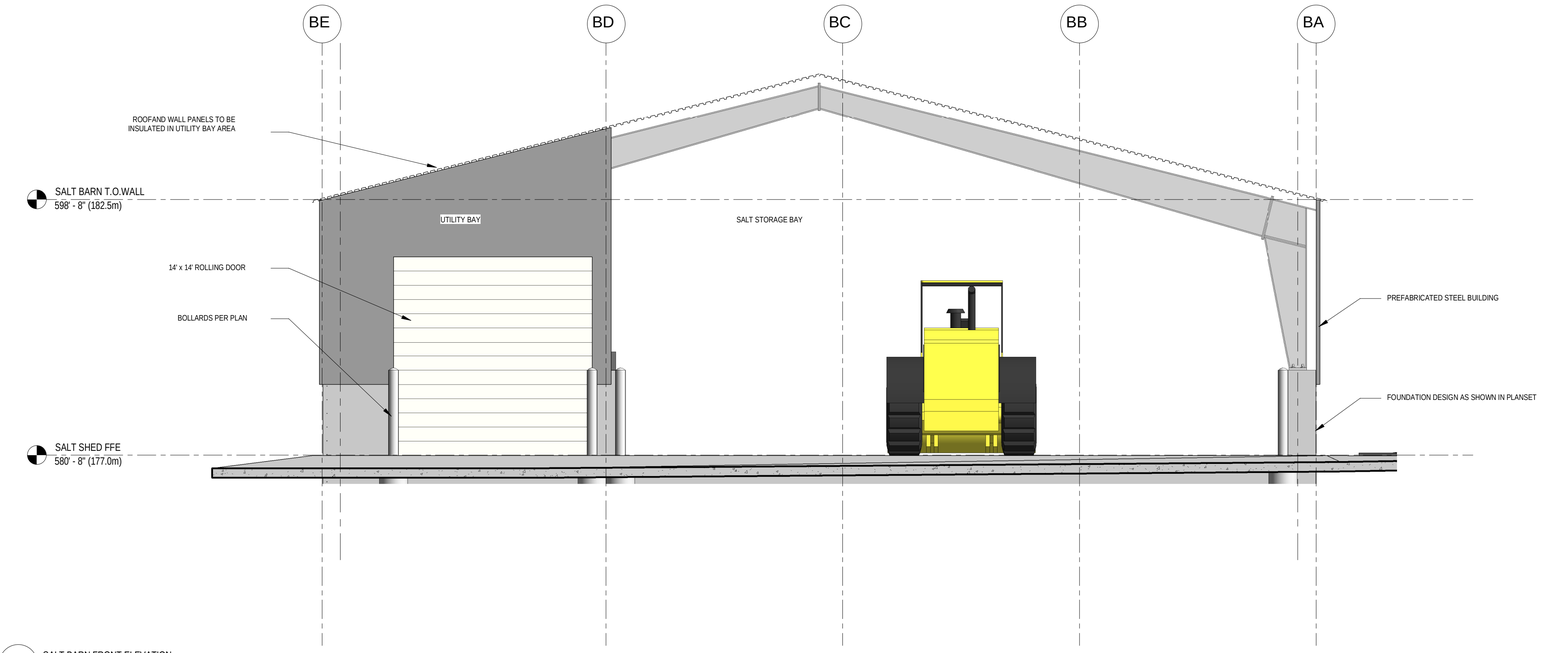

1 SALT BARN FRONT ELEVATION
3/16" = 1'-0"

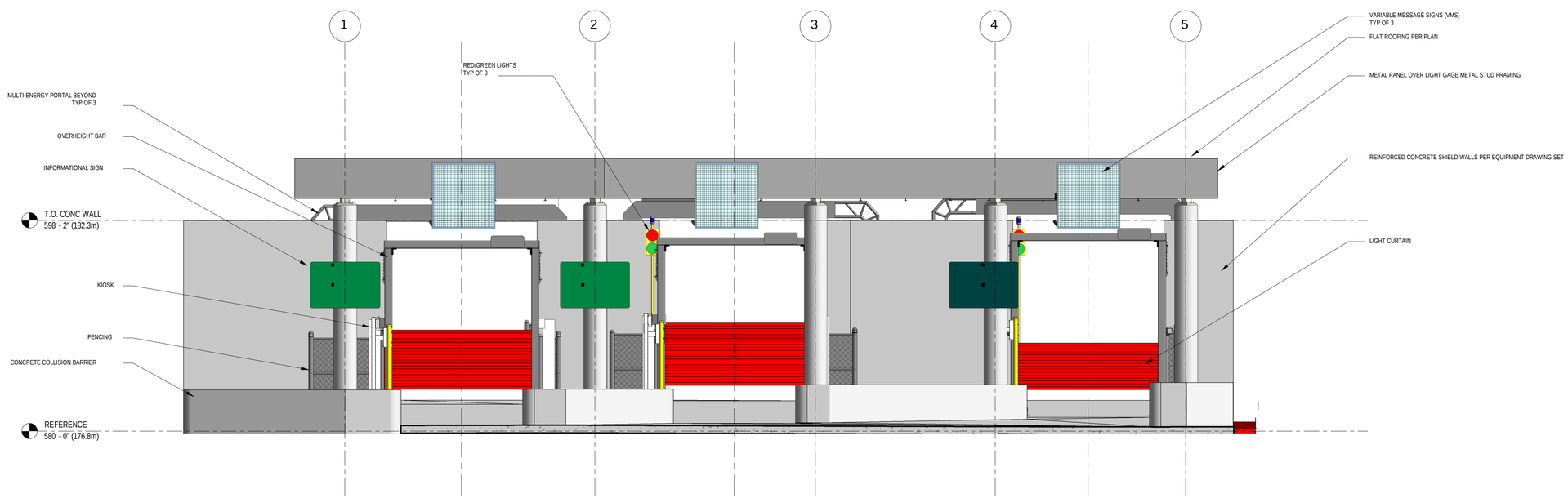

2 TRUCK CANOPY FRONT ELEVATION
3/16" = 1'-0"

MARK	DESCRIPTION	DATE	APPR

IT IS A VIOLATION OF THE LAW FOR ANY PERSON, UNLESS ACTING UNDER THE DIRECT SUPERVISION OF A LICENSED ARCHITECT OR ENGINEER, TO ALTER AN ITEM BEARING THE SEAL OF AN ARCHITECT OR ENGINEER. ALTERING ARCHITECT OR ENGINEER SHALL AFFIX TO THEIR ITEM THE SEAL AND THE WORDS "ALTERED BY" FOLLOWED BY THEIR SIGNATURE AND THE DATE OF SUCH ALTERATION AND A SPECIFIC DESCRIPTION OF THE ALTERATION.

DISCLAIMER

DESIGNED BY: Designer
DWN BY: Author
CKD BY: Checker
SUBMITTED BY:
DATE: 09/01/2024
SOLICITATION NO.:
CONTRACT NO.: 187928
FILE NAME: BIM 360://BUF-300000441 - Peace Bridge GEC - RSP Parc 3.0 - Discipline Plan.rvt
PLOTTED BY:
PLOT DATE: 09/01/2024
SIZE: 22" X 34"

BUFFALO AND FORT ERIE PUBLIC BRIDGE AUTHORITY
xx

WSP USA Inc.
1883 Niagara Falls Blvd.
Buffalo, N.Y. 14228
(716) 849-1250

BUFFALO AND FORT ERIE PUBLIC BRIDGE AUTHORITY
PROJECT# XXX PARE 3.0

ELEVATIONS

CROSSING PATHS BUILDING FUTURES
THE PEACE BRIDGE

DRAWING NUMBER
SG102

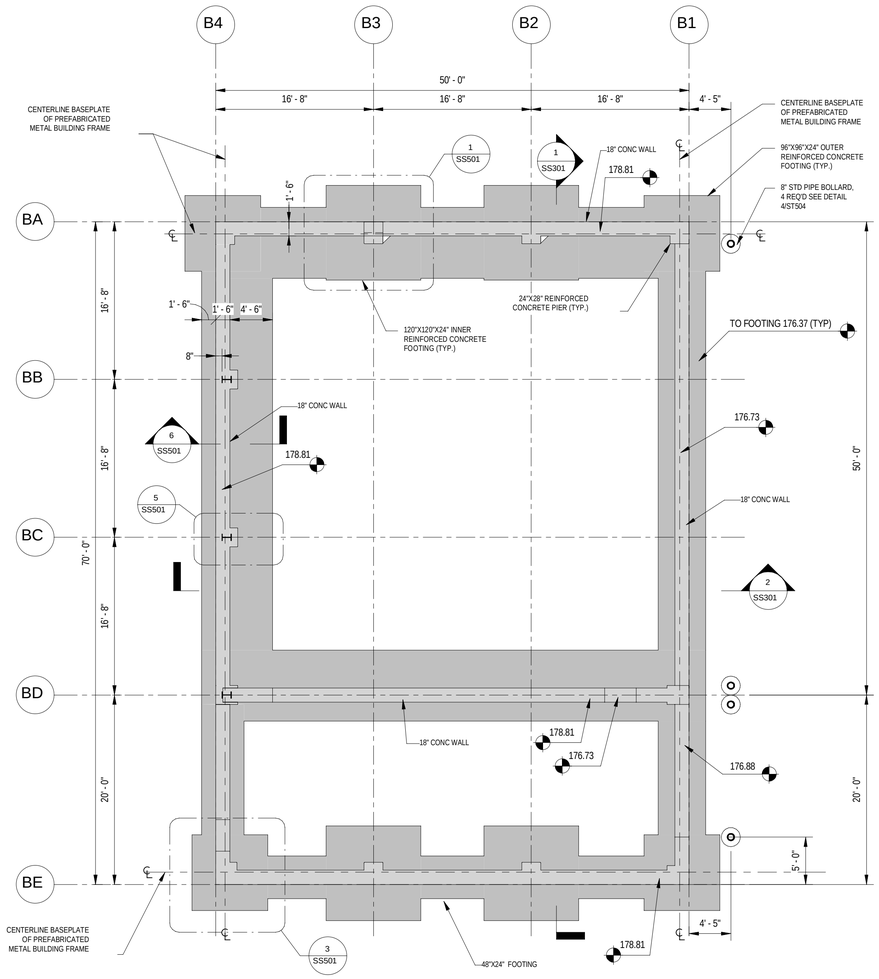

1 SALT BARN FOUNDATION PLAN
1/8" = 1'-0"

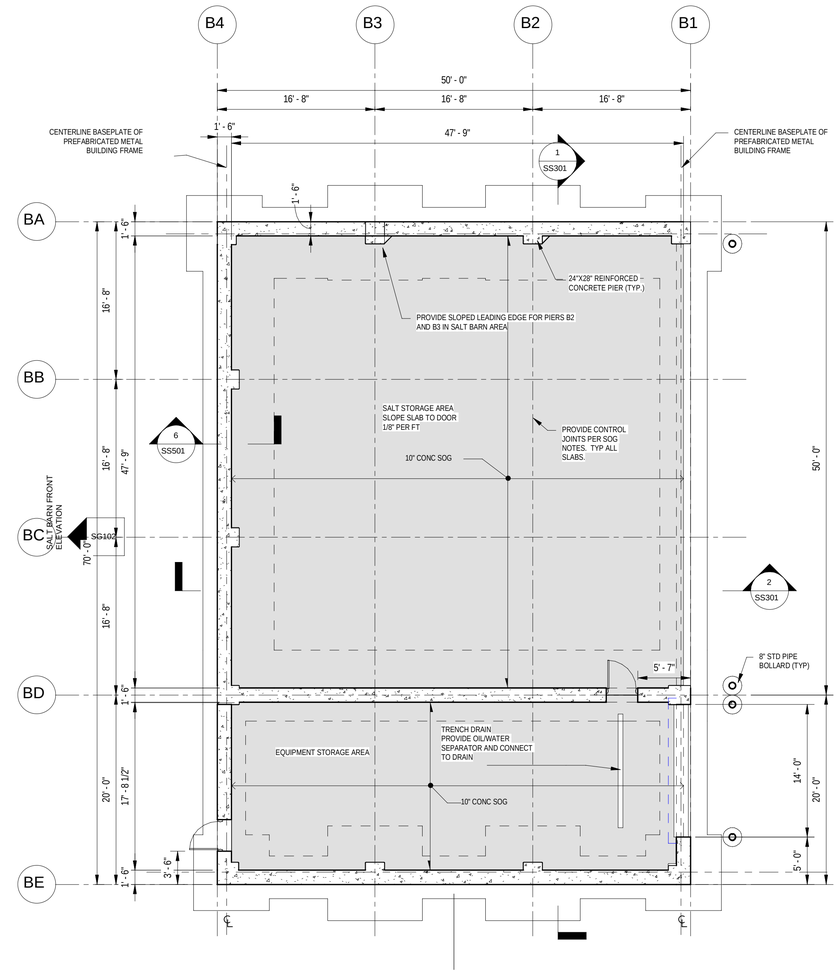

2 SALT BARN FLOOR PLAN
1/8" = 1'-0"

IT IS A VIOLATION OF THE LAW FOR ANY PERSON, UNLESS ACTING UNDER THE DIRECT SUPERVISION OF A LICENSED ARCHITECT OR ENGINEER, TO ALTER AN ITEM IN ANY WAY. IF AN ITEM BEARING THE SEAL OF AN ARCHITECT OR ENGINEER IS ALTERED, THE ALTERING ARCHITECT OR ENGINEER SHALL AFFIX TO THEIR ITEM THE SEAL AND THE WORDS "ALTERED BY" FOLLOWED BY THEIR SIGNATURE AND THE DATE OF SUCH ALTERATION AND A SPECIFIC DESCRIPTION OF THE ALTERATION.

DISCLAIMER

MARK	DESCRIPTION	DATE	APPR
A	ISSUED FOR BID (NOT FOR CONST.)	03/21/2024	

DESIGNED BY: Designer
DATE: 03/21/2024
DWN BY: Author
CKD BY: Checker
SOLICITATION NO.: XX
SUBMITTED BY:
CONTRACT NO.: 187928
FILE NAME: BIM-360:/BUF-00-30000/41 - France Bridge GEC - REDPAGE 1.0 - Discipline/ FE114
PLOT DATE: 03/21/2024
SIZE: 22" X 34"
PLOTTED BY:

BUFFALO AND FORT ERIE PUBLIC BRIDGE AUTHORITY
XX

WSP USA Inc.
1 Penn Plaza, 4th Floor
Suite 215
Buffalo, NY 14202
(716) 849-1120

BUFFALO AND FORT ERIE PUBLIC BRIDGE AUTHORITY
PROJECT# XXX PARE 3.0

SALT BARN FOUNDATION & FLOOR PLAN

CROSSING PATHS BUILDING FUTURES
THE PEACE BRIDGE

DRAWING NUMBER
SS101

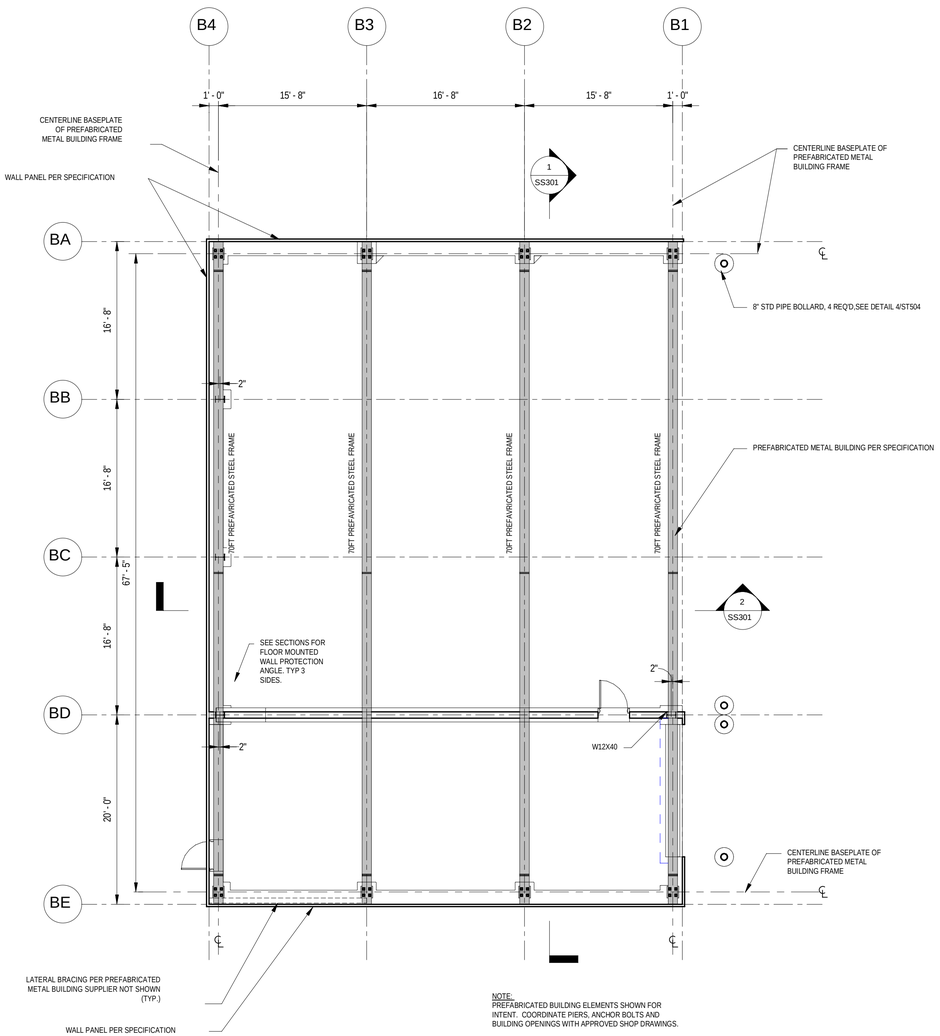

SALT BARN FRONT ELEVATION

SG102

PLAN NORTH

SALT BARN FRAMING PLAN

1/8" = 1'-0"

IT IS A VIOLATION OF THE LAW FOR ANY PERSON, UNLESS ACTING UNDER THE DIRECT SUPERVISION OF A LICENSED ARCHITECT OR ENGINEER, TO ALTER ANY ITEM ON THIS DRAWING. IF THIS DRAWING IS ALTERED, THE ALTERING ARCHITECT OR ENGINEER SHALL AFFIX TO THEIR ITEM THE WORDS "ALTERED BY" FOLLOWED BY THEIR NAME, THE TITLE, AND THE DATE OF SUCH ALTERATION AND A SPECIFIC DESCRIPTION OF THE ALTERATION.

DISCLAIMER

MARK	DESCRIPTION	DATE	APPR

DESIGNED BY: Designer
DWN BY: Author
CKD BY: Checker
SUBMITTED BY:
DATE: 08/01/2024
SOLICITATION NO.:
CONTRACT NO.: 187928
FILE NAME: BIM 360/BUF-DO-30000041 - Peace Bridge GEC - RIS/PARE 3.0 - Discipline 1R2.rvt
PLOTTED BY:
PLOT DATE: 08/01/2024
SIZE: 22" X 34"

BUFFALO AND FORT ERIE PUBLIC BRIDGE AUTHORITY
XX

WSP USA Inc.
Wilson Farrow Drive
Suite 204
Amherst, N.Y. 14228
(716) 204-1818

BUFFALO AND FORT ERIE PUBLIC BRIDGE AUTHORITY PROJECT# XXX PARE 3.0

SALT BARN FRAMING PLAN

CROSSING PATHS BUILDING FUTURES
THE PEACE BRIDGE

DRAWING NUMBER

SS102

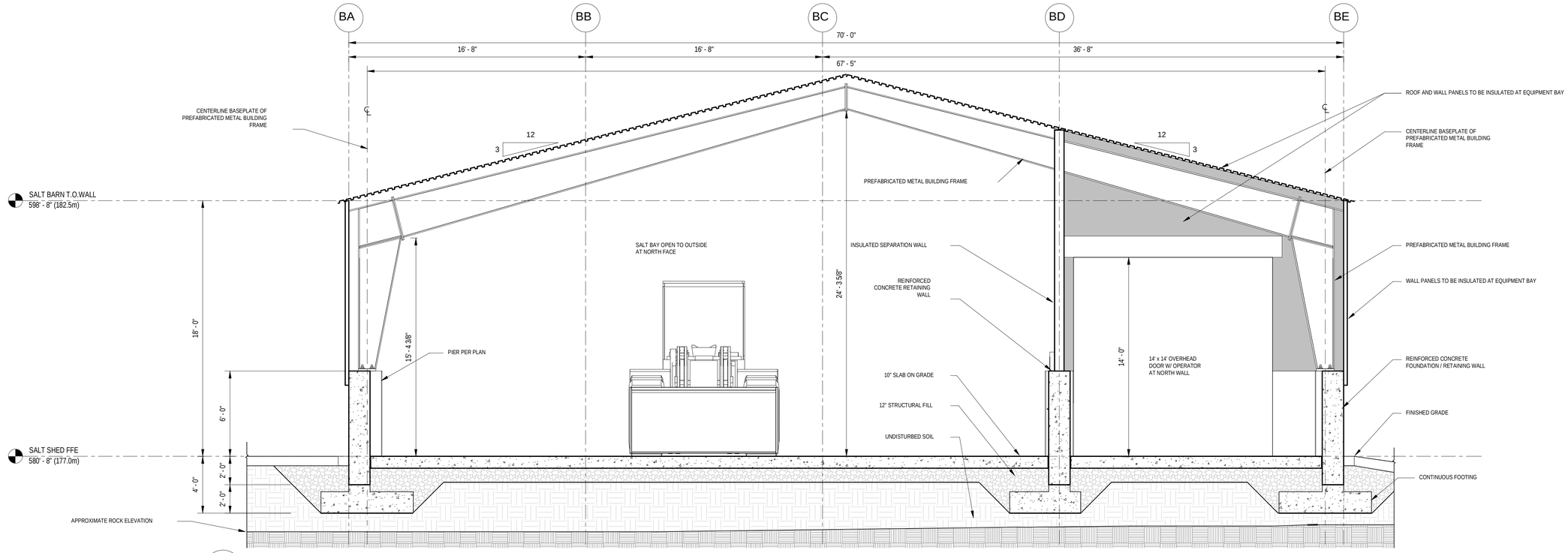

1 SS101 SALT BARN TRANSVERSE SECTION
1/4" = 1'-0"

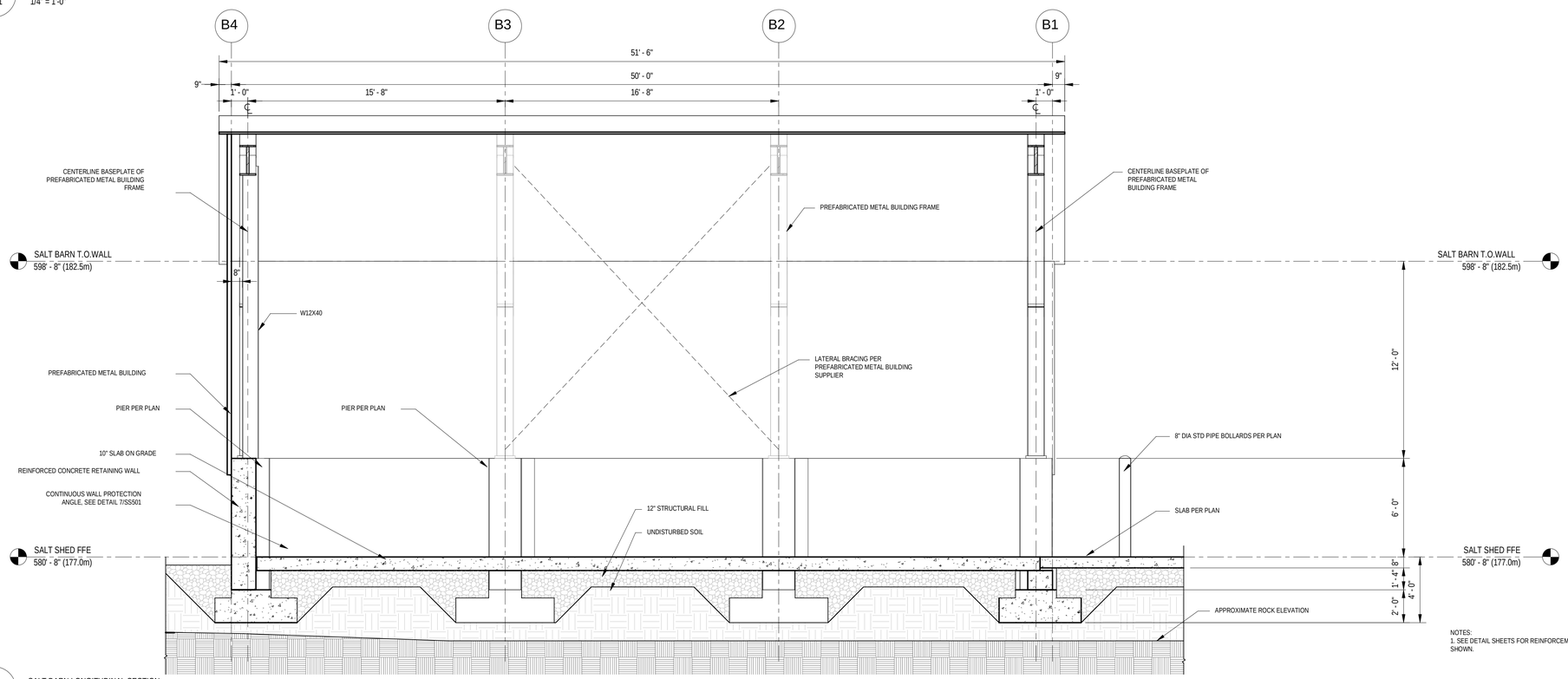

NOTES:
1. SEE DETAIL SHEETS FOR REINFORCEMENT NOT SHOWN.

2 SS101 SALT BARN LONGITUDINAL SECTION
1/4" = 1'-0"

IT IS A VIOLATION OF THE LAW FOR ANY PERSON, UNLESS ACTING UNDER THE DIRECT SUPERVISION OF A LICENSED ARCHITECT OR ENGINEER, TO ALTER AN ITEM IN ANY WAY. IF AN ITEM BEARING THE SEAL OF AN ARCHITECT OR ENGINEER IS ALTERED, ALTERING ARCHITECT OR ENGINEER SHALL AFFIX TO THEIR ITEM THE WORDS "ALTERED BY" FOLLOWED BY THEIR SIGNATURE AND THE DATE OF SUCH ALTERATION AND A SPECIFIC DESCRIPTION OF THE ALTERATION.
DISCLAIMER

MARK	DESCRIPTION	DATE	APPR
A	ISSUED FOR BID (NOT FOR CONST.)	03/21/2024	

DESIGNED BY: Designer
DWN BY: Author
CKD BY: Checker
SUBMITTED BY:
DATE: 03/21/2024
SOLICITATION NO.:
CONTRACT NO.: 187928
FILE NAME: BIM 360://BUF-100-3000043-1 - Peace Bridge GEC - RS25/PARE 3.0 - Structural/R23.rvt
SIZE: 22" x 34"
PLOTTED BY:
PLOT DATE: 03/01/2024

BUFFALO AND FORT ERIE PUBLIC BRIDGE AUTHORITY
xx

WSP USA Inc.
Buffalo Corporate Drive
Buffalo, N.Y. 14203
(716) 783-1120

CROSSING PATHS BUILDING FUTURES
THE PEACE BRIDGE

BUFFALO AND FORT ERIE PUBLIC BRIDGE AUTHORITY
PROJECT# XXX PARE 3.0

SALT BARN SECTIONS

DRAWING NUMBER
SS301

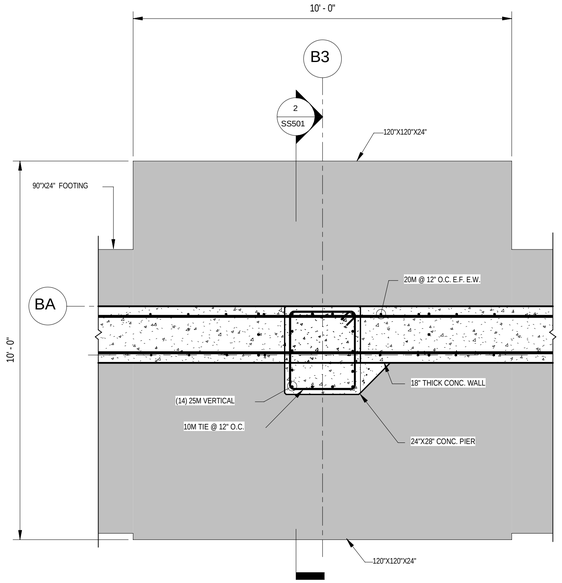

1 / SS101 TYPICAL SALT BARN PIER REIFORCEMENT DETAIL
1/2" = 1'-0"

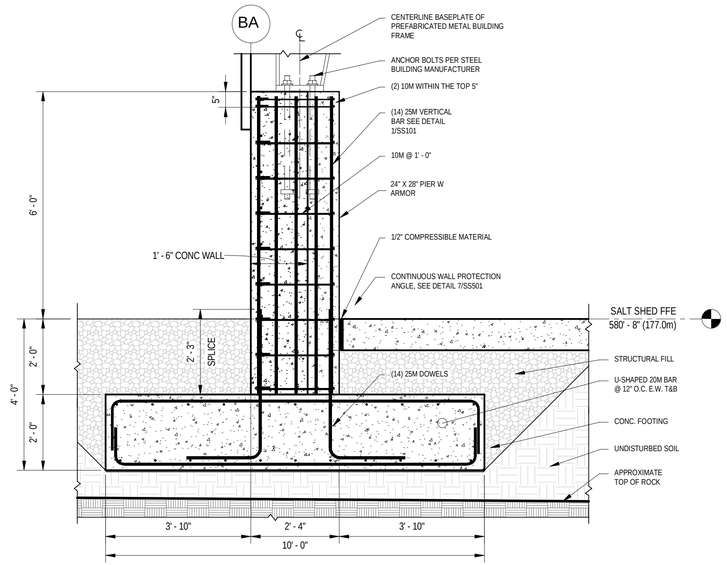

2 / SS501 SALT BARN FOUNDATION SECTION
1/2" = 1'-0"

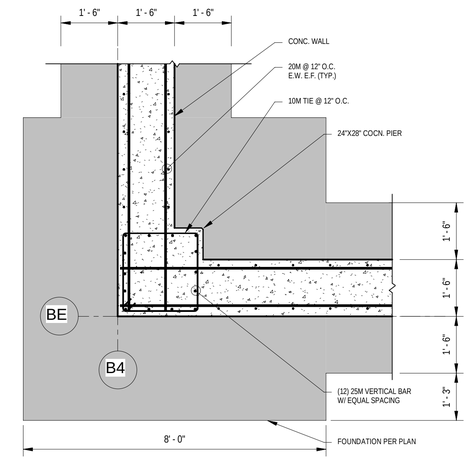

3 / SS101 TYPICAL SALT BARN CORNER PIER REINFORCEMENT DETAIL
1/2" = 1'-0"

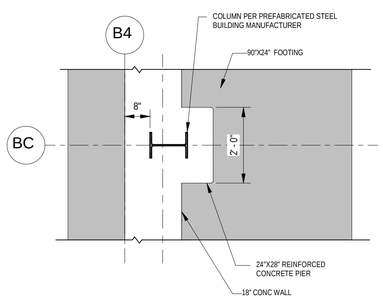

5 / SS101 SALT BARN 24X28 CONC PIER DETAIL
1/2" = 1'-0"

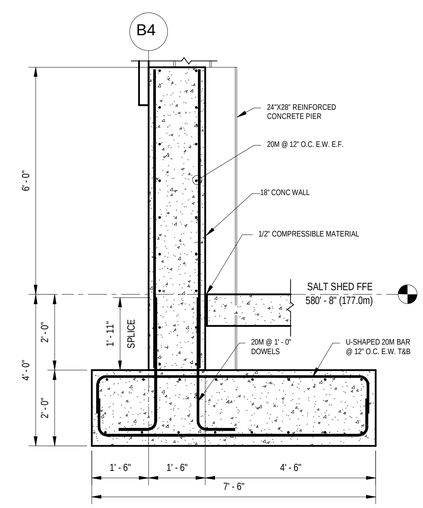

6 / SS101 TYPICAL SALT BARN WALL SECTION
1/2" = 1'-0"

IT IS A VIOLATION OF THE LAW FOR ANY PERSON, UNLESS ACTING UNDER THE DIRECT SUPERVISION OF A LICENSED ARCHITECT OR ENGINEER, TO ALTER ANYTHING IN ANY WAY. IF AN ITEM BEARING THE SEAL OF AN ARCHITECT OR ENGINEER IS ALTERED, THE ALTERING ARCHITECT OR ENGINEER SHALL AFFIX TO THEIR ITEM THE WORDS "ALTERED BY" FOLLOWED BY THEIR SIGNATURE AND THE SPECIFIC DESCRIPTION OF THE ALTERATION.
DISCLAIMER

MARK	DESCRIPTION	DATE	APPR
A	ISSUED FOR BID (NOT FOR CONST.)	03/21/2024	

DESIGNED BY: Designer
DWN BY: Author
CKD BY: Checker
SUBMITTED BY:
DATE: 03/21/2024
SOLICITATION NO.:
CONTRACT NO.: 187928
FILE NAME: BIM 360://BUF-I-DD-30000041 - Peace Bridge GEC - R22/PARE 3.0 - Structural R21.rvt
SIZE: 22" X 34"
PLOTTED BY:
PLOT DATE: 03/01/2024

BUFFALO AND FORT ERIE PUBLIC BRIDGE AUTHORITY
xx

WSP USA, Inc.
Buffalo, New York
Suite 210
14202
(716) 593-1120

BUFFALO AND FORT ERIE PUBLIC BRIDGE AUTHORITY
PROJECT# XXX PARE 3.0

SALT BARN FOUNDATION DETAILS

CROSSING PATHS BUILDING FUTURES
THE PEACE BRIDGE

DRAWING NUMBER
SS501

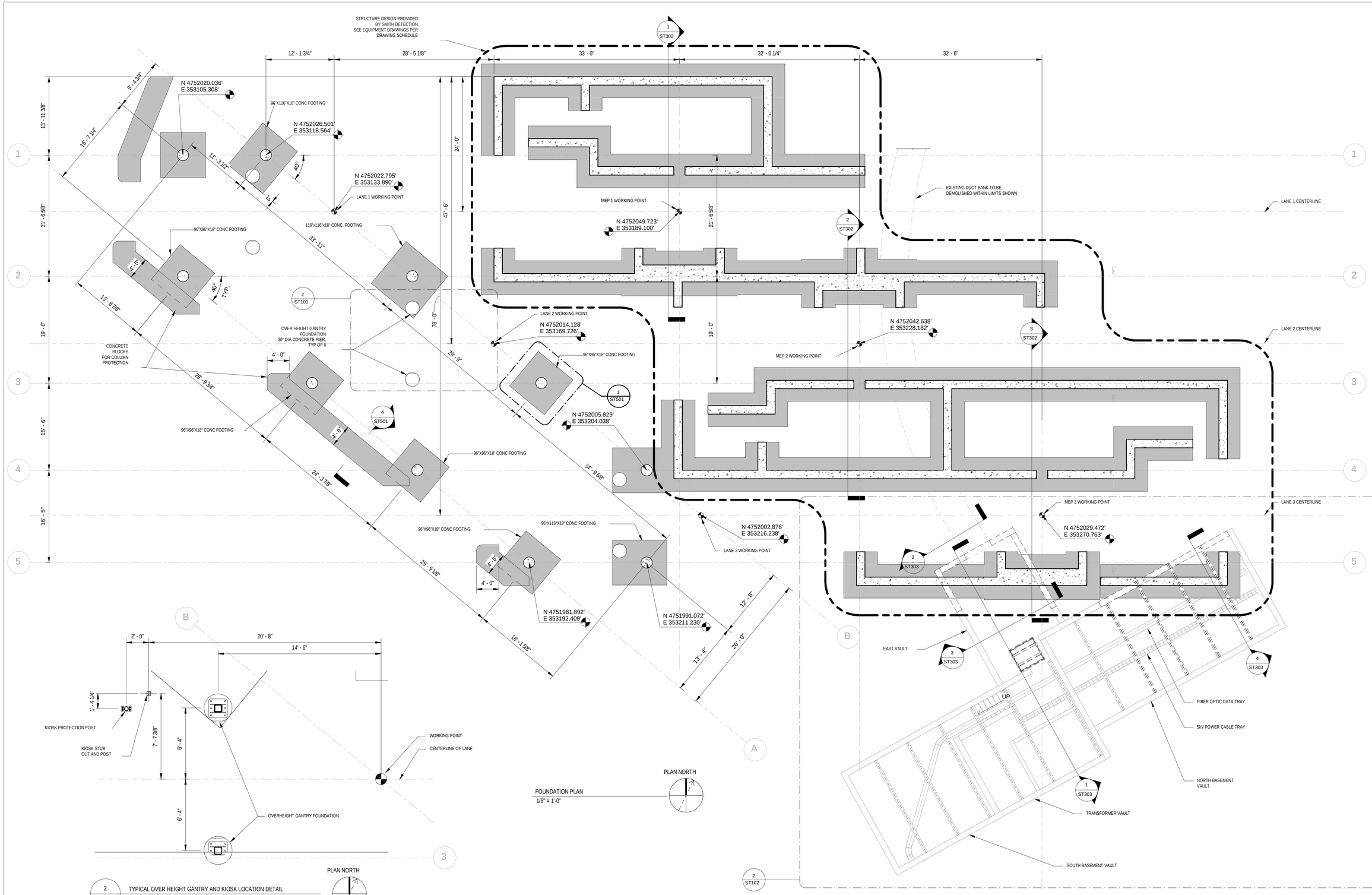

IT IS A VIOLATION OF THE LAW FOR ANY PERSON, UNLESS ACTING UNDER THE DIRECT SUPERVISION OF A LICENSED ARCHITECT OR ENGINEER, TO ALTER ANY ITEM ON ANY WORK. IF ANY ITEM BEARING THE SEAL OF AN ARCHITECT OR ENGINEER IS ALTERED, THE ALTERING ARCHITECT OR ENGINEER SHALL AFFIX TO THEIR ITEM THE WORDS "ALTERED BY" FOLLOWED BY THEIR SIGNATURE AND THE DATE OF SUCH ALTERATION AND A SPECIFIC DESCRIPTION OF THE ALTERATION.

DISCLAIMER

MARK	DESCRIPTION	DATE	APPR
A	ISSUED FOR BID (NOT FOR CONST.)	03/21/2024	

DATE: 03/21/2024
SOLICITATION NO.:
CONTRACT NO.: 187928
PLOT DATE: 03/01/2024
PLOTTED BY:
DESIGNED BY: A. Hussainy
DWN BY: A. Hussainy
CKD BY: Checker
SUBMITTED BY:
FILE NAME: BIM 360://BUF-100-X000031 - Peace Bridge GEC - RD25\Peace 2.0 - Structural\R21.rvt
SIZE: 22" X 34"

BUFFALO AND FORT ERIE PUBLIC BRIDGE AUTHORITY
xx

WSP USA Inc.
1395 Ridge Pike Drive
Suite 25
Cranberry Twp., 14433
(724) 933-1220

BUFFALO AND FORT ERIE PUBLIC BRIDGE AUTHORITY
PROJECT# XXX PARE 3.0

TRUCK CANOPY FOUNDATION PLAN (1/2)

CROSSING PATHS BUILDING FUTURES THE PEACE BRIDGE

DRAWING NUMBER

ST101

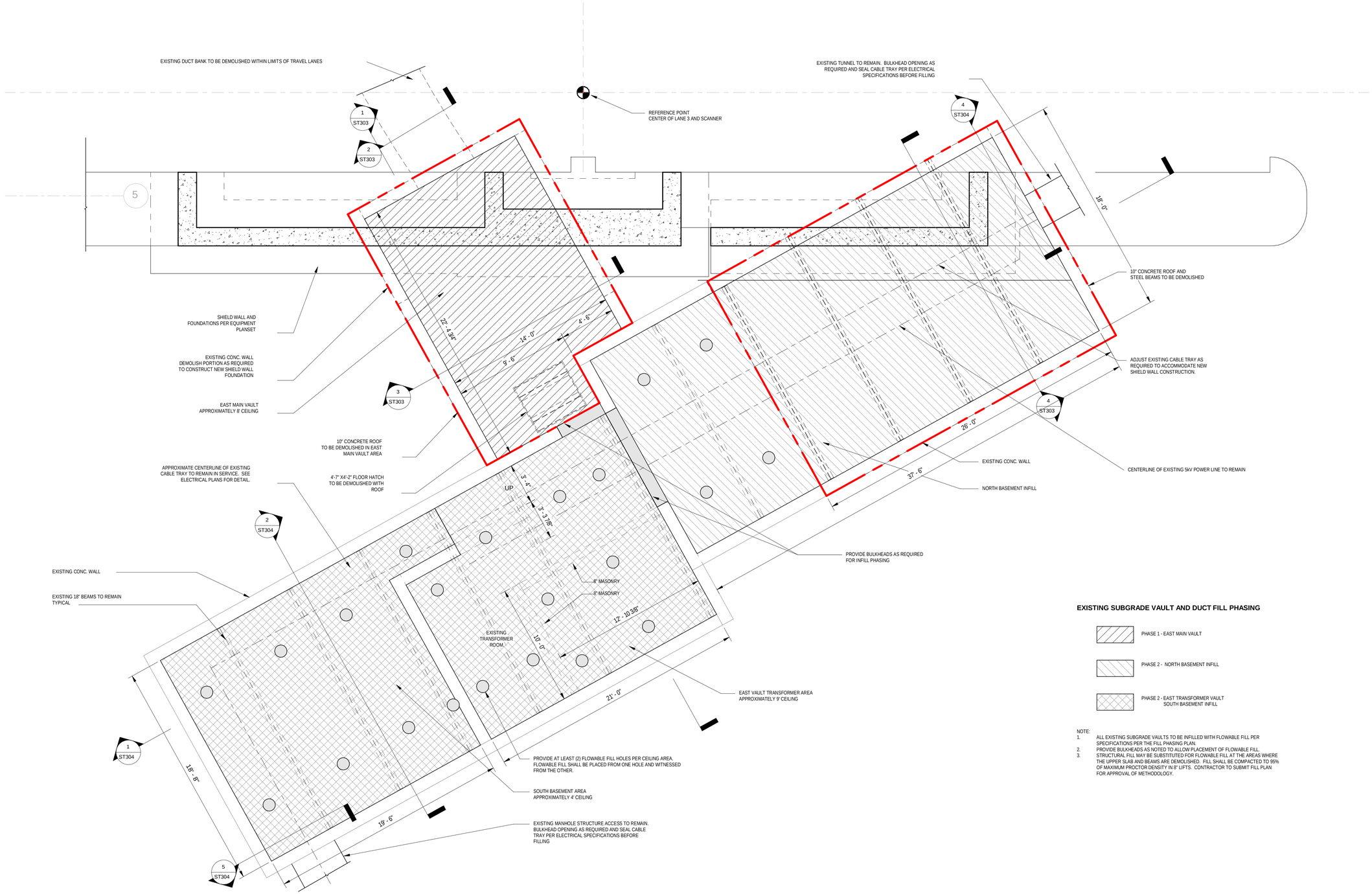

EXISTING VAULT INFILL PLAN DETAIL
1/4" = 1'-0"

EXISTING SUBGRADE VAULT AND DUCT FILL PHASING

- PHASE 1 - EAST MAIN VAULT
- PHASE 2 - NORTH BASEMENT INFILL
- PHASE 2 - EAST TRANSFORMER VAULT SOUTH BASEMENT INFILL

NOTE:
1. ALL EXISTING SUBGRADE VAULTS TO BE INFILLED WITH FLOWABLE FILL PER SPECIFICATIONS PER THE FILL PHASING PLAN.
2. PROVIDE BULKHEADS AS NOTED TO ALLOW PLACEMENT OF FLOWABLE FILL.
3. STRUCTURAL FILL MAY BE SUBSTITUTED FOR FLOWABLE FILL AT THE AREAS WHERE THE UPPER SLAB AND BEAMS ARE DEMOLISHED. FILL SHALL BE COMPACTED TO 95% OF MAXIMUM PROCTOR DENSITY IN 8" LIFTS. CONTRACTOR TO SUBMIT FILL PLAN FOR APPROVAL OF METHODOLOGY.

PLAN NORTH

IT IS A VIOLATION OF THE LAW FOR ANY PERSON, UNLESS ACTING UNDER THE DIRECT SUPERVISION OF A LICENSED ARCHITECT OR ENGINEER, TO ALTER ANY ITEM ON THIS DOCUMENT. IF AN ALTERATION IS MADE, THE ALTERING ARCHITECT OR ENGINEER SHALL AFFIX TO THEIR ITEM THE WORDS "ALTERED BY" FOLLOWED BY THEIR NAME, THE TITLE OF THE ALTERATION AND A SPECIFIC DESCRIPTION OF THE ALTERATION.

DISCLAIMER

MARK	DESCRIPTION	DATE	APPR

DESIGNED BY: Designer
DWN BY: Author
CKD BY: Checker
SUBMITTED BY:
DATE: 00/01/2024
SOLICITATION NO.:
CONTRACT NO.: 187928
FILE NAME: BIM 360/BUF-DO-3000004-1 - Peace Bridge GEC - RSP/Apr. 19 - Structural R21.rvt
PLOTTED BY:
PLOT DATE: 08/01/2024
SIZE: 22" X 34"

BUFFALO AND FORT ERIE PUBLIC BRIDGE AUTHORITY
XX

WSP USA Inc.
Walt Whitman Drive
Suite 204
Buffalo, N.Y. 14202
(716) 849-1260

BUFFALO AND FORT ERIE PUBLIC BRIDGE AUTHORITY
PROJECT# XXX PARE 3.0

TRUCK CANOPY FOUNDATION PLAN (2/2)

CROSSING PATHS BUILDING FUTURES THE PEACE BRIDGE

DRAWING NUMBER
ST102

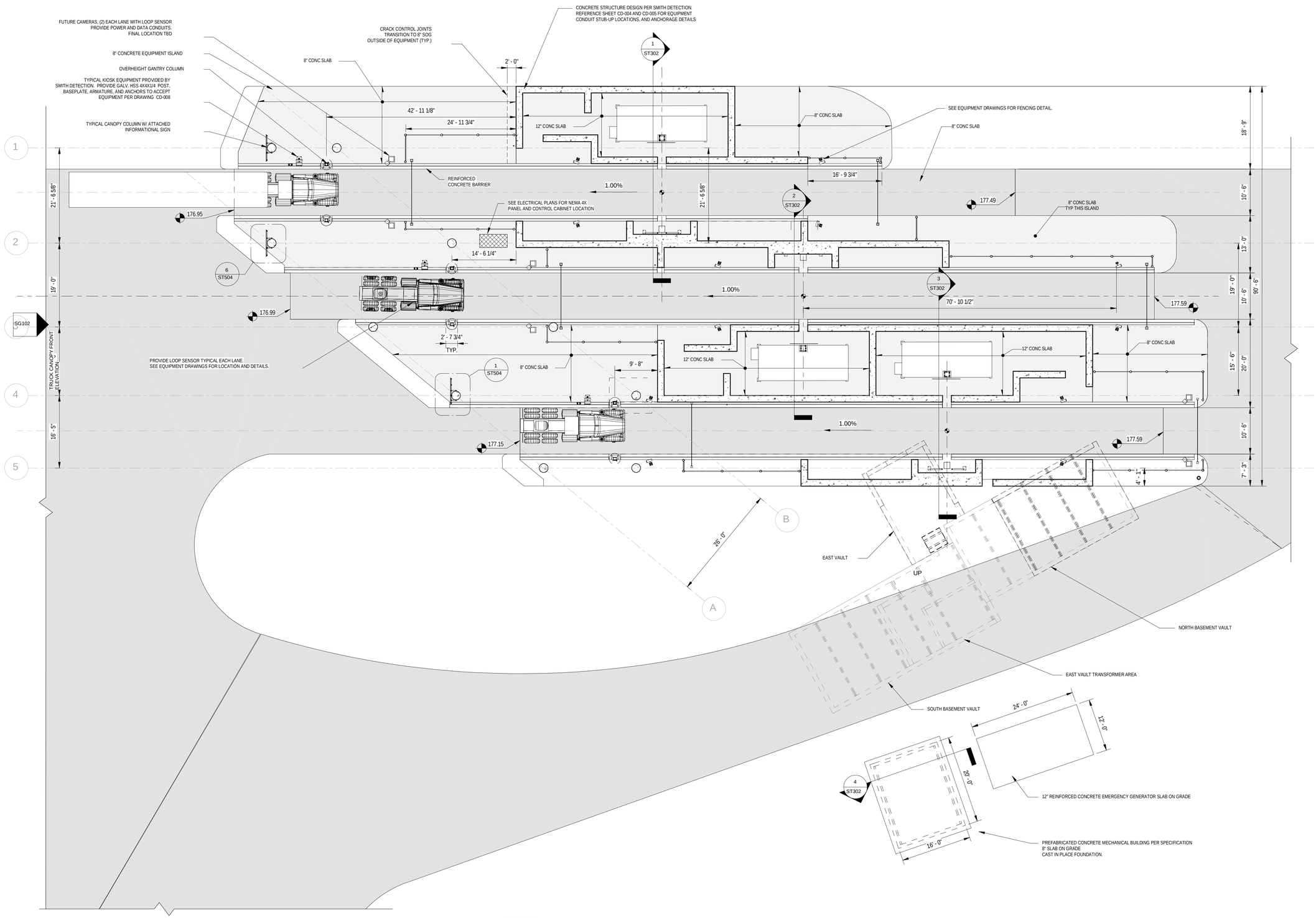

TRUCK CANOPY SLAB PLAN

3/32" = 1'-0"

IT IS A VIOLATION OF THE LAW FOR ANY PERSON, UNLESS ACTING UNDER THE DIRECT SUPERVISION OF A LICENSED ARCHITECT OR ENGINEER, TO ALTER ANY ITEM ON THIS DOCUMENT. IF AN ALTERATION IS MADE, THE ALTERING ARCHITECT OR ENGINEER SHALL AFFIX TO THEIR ITEM THE WORDS "ALTERED BY" FOLLOWED BY THEIR SIGNATURE AND THE DATE OF SUCH ALTERATION AND A SPECIFIC DESCRIPTION OF THE ALTERATION.

DISCLAIMER

MARK	DESCRIPTION	DATE	APPR
A	ISSUED FOR BID (NOT FOR CONST.)	03/21/2024	

DATE: 03/21/2024

SOLICITATION NO.:

CONTRACT NO.: 187928

BIM 360://BUF-DO-30000-01 - Peace Bridge GEC - R22/PARE 3.0 - Structural R21.rvt

FILE NAME:

PLOT DATE: 03/01/2024

PLOTTED BY:

SIZE: 22" X 34"

DESIGNED BY: A. Hossainy

DWN BY: A. Hossainy

CKD BY: Bajorek

SUBMITTED BY:

WSP USA Inc.
1 Penn Plaza
Suite 214
Pittsburgh, PA 15222
(724) 743-1120

BUFFALO AND FORT ERIE
PUBLIC BRIDGE AUTHORITY

xx

BUFFALO AND FORT ERIE PUBLIC
BRIDGE AUTHORITY
PROJECT# XXX PARE 3.0

TRUCK CANOPY SLAB AND EQUIPMENT
PLAN

CROSSING PATHS BUILDING FUTURES
THE PEACE BRIDGE

DRAWING
NUMBER

ST103

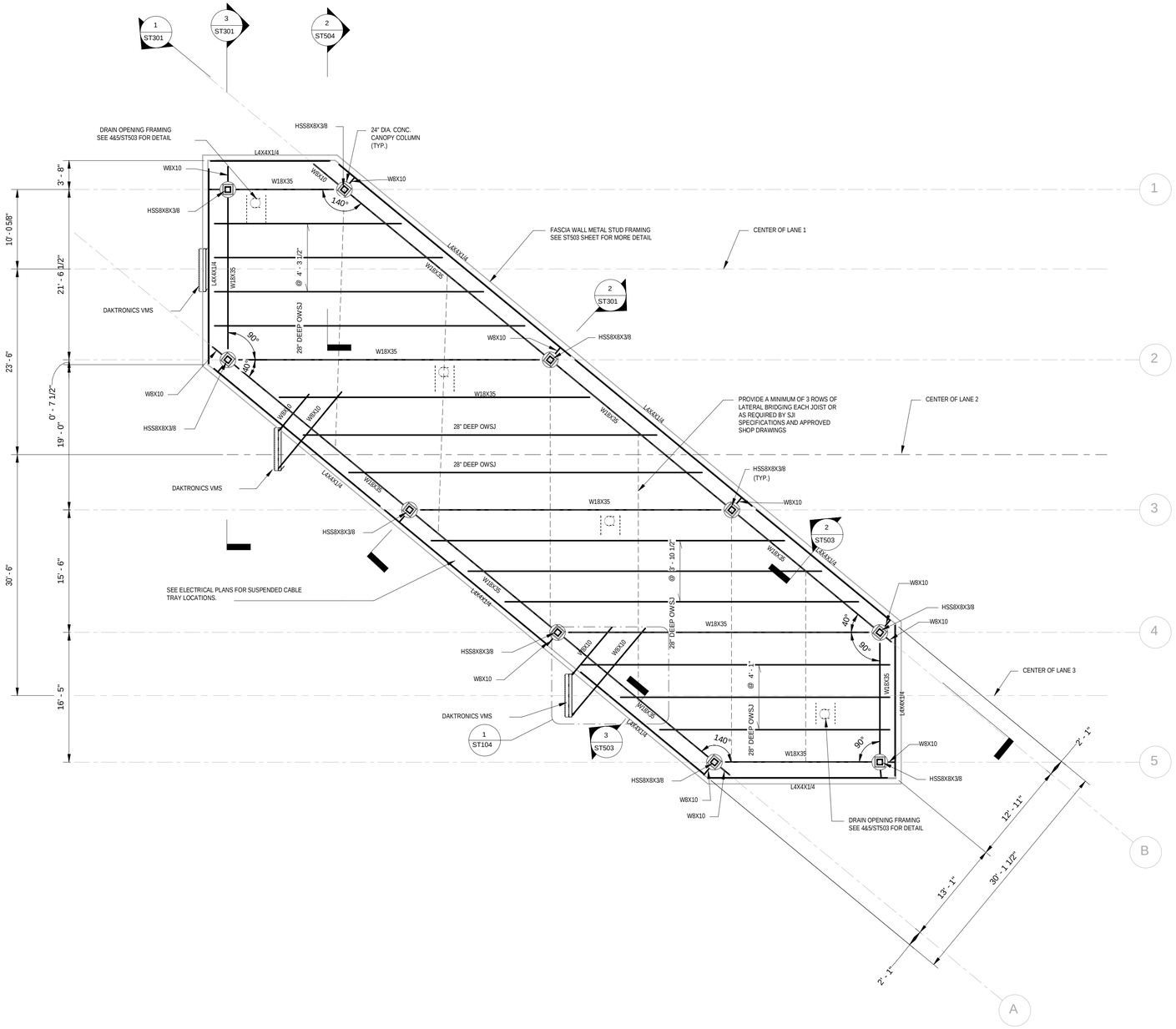

TRUCK CANOPY - ROOF FRAMING PLAN
1/8" = 1'-0"

PLAN NORTH

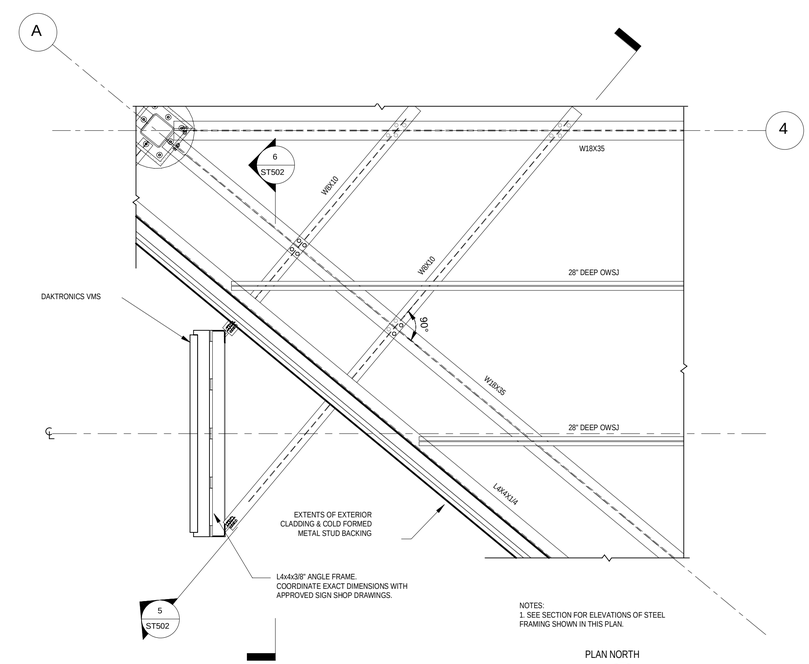

1 ST104 VMS SUPPORT BRACKET
1/2" = 1'-0"

PLAN NORTH

IT IS A VIOLATION OF THE LAW FOR ANY PERSON, UNLESS ACTING UNDER THE DIRECT SUPERVISION OF A LICENSED ARCHITECT OR ENGINEER, TO ALTER ANY ITEM ON THIS DRAWING. IF AN ITEM BEARING THE STAMP OF A LICENSED ARCHITECT OR ENGINEER IS ALTERED, ALTERING ARCHITECT OR ENGINEER SHALL AFFIX TO THEIR ITEM THE WORDS "ALTERED BY" FOLLOWED BY THEIR SIGNATURE AND THE DESCRIPTION OF THE ALTERATION AND A SPECIFIC DATE OF THE ALTERATION.

DISCLAIMER

MARK	DESCRIPTION	DATE	APPR
A	ISSUED FOR BID (NOT FOR CONST.)	03/21/2024	

DESIGNED BY: A. Hossaily
DWN BY: A. Hossaily
CKD BY: Checker
SUBMITTED BY:
DATE: 03/21/2024
SOLICITATION NO.:
CONTRACT NO.: 187928
FILE NAME: BIM 360:/BUF-00-S090041 - Peace Bridge GEC - RD/PABE 2.0 - Discipline/ST2.1.rvt
PLOTTED BY:
PLOT DATE: 08/01/2024
SIZE: 22" X 34"

BUFFALO AND FORT ERIE PUBLIC BRIDGE AUTHORITY
XX

WSP USA Inc.
44 Hawley St., 17th Floor
Buffalo, NY - 14202
(716) 849-1150

BUFFALO AND FORT ERIE PUBLIC BRIDGE AUTHORITY
PROJECT# XXX PARE 3.0

TRUCK CANOPY ROOF PLAN

CROSSING PATHS BUILDING FUTURES
THE PEACE BRIDGE

DRAWING NUMBER
ST104

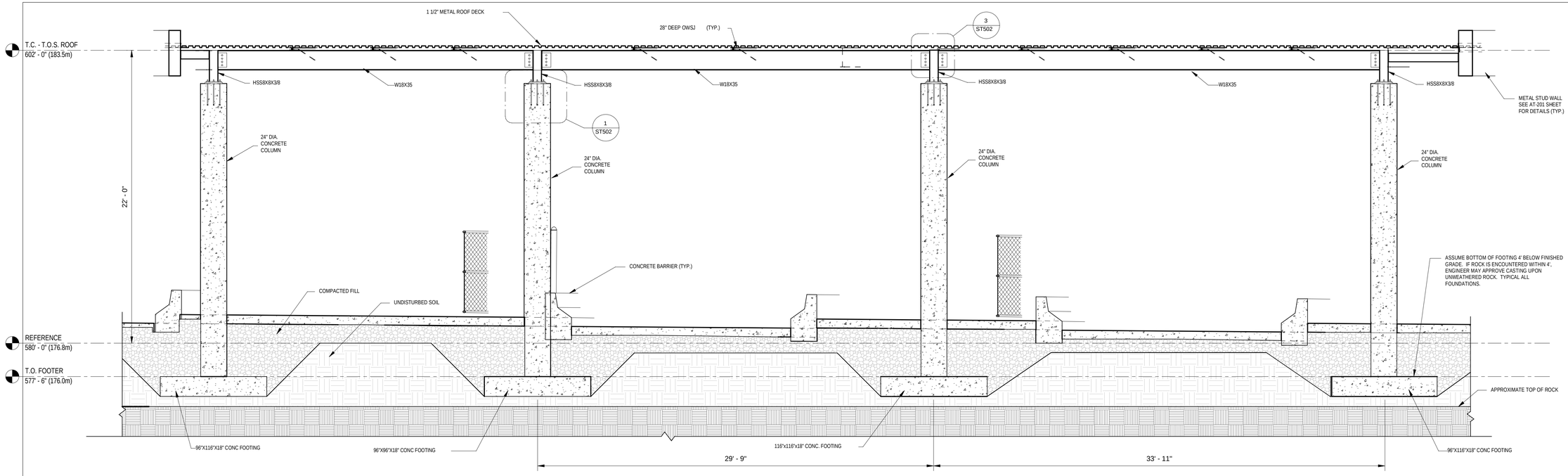

1 ST104 CANOPY GRID B SECTION
1/4" = 1'-0"

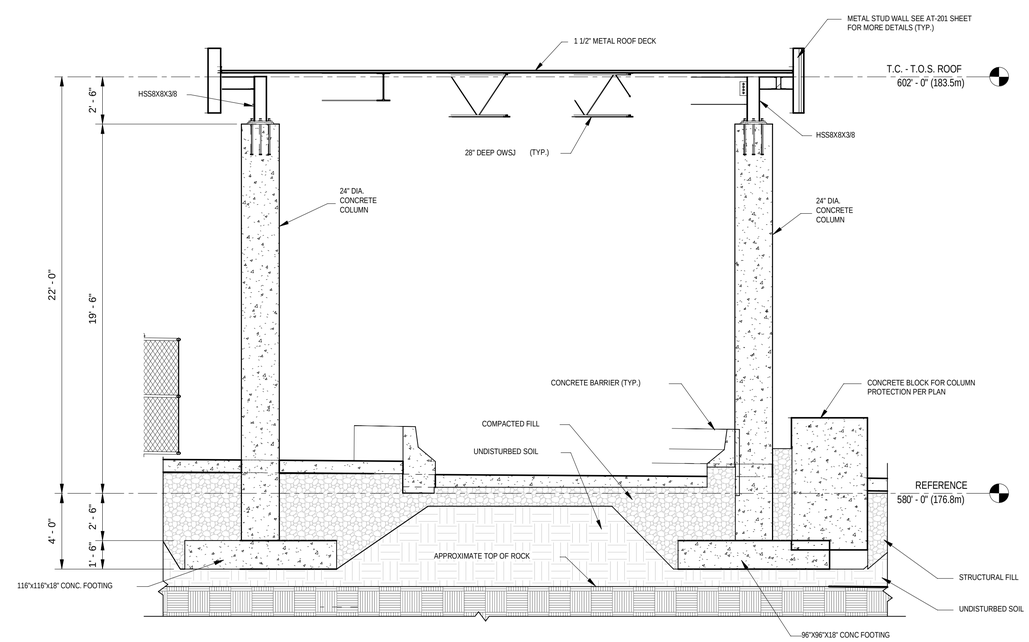

2 ST104 CANOPY TRANSVERES SECTION (1/2)
1/4" = 1'-0"

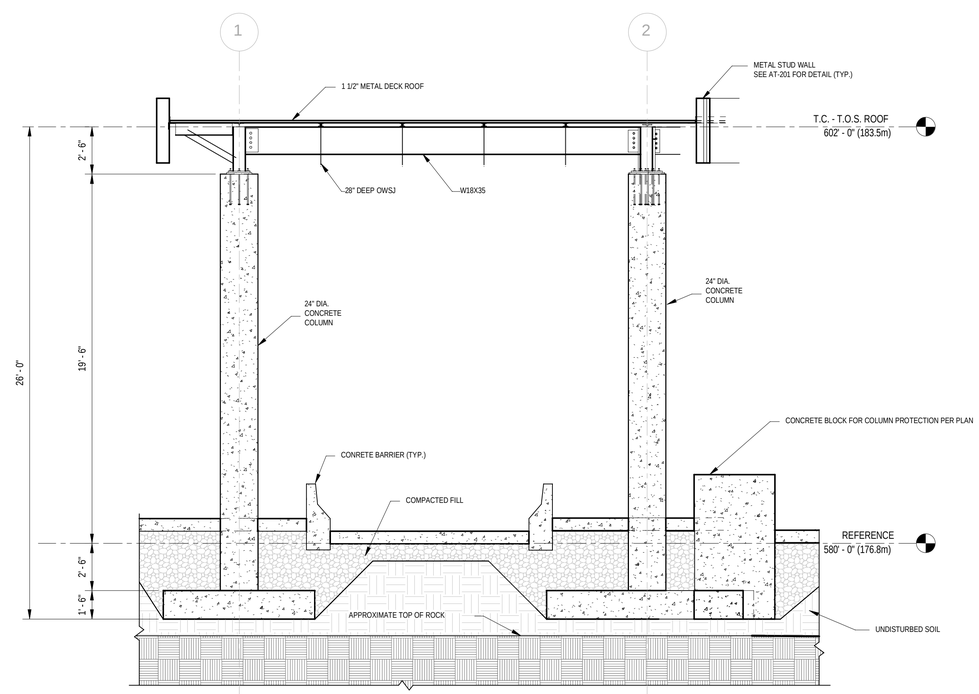

3 ST104 CANOPY TRANSVERES SECTION (2/2)
1/4" = 1'-0"

IT IS A VIOLATION OF THE LAW FOR ANY PERSON, UNLESS ACTING UNDER THE DIRECT SUPERVISION OF A LICENSED ARCHITECT OR ENGINEER, TO ALTER AN ITEM IN ANY WAY. IF AN ITEM BEARING THE SEAL OF AN ARCHITECT OR ENGINEER IS ALTERED, THE ALTERING ARCHITECT OR ENGINEER SHALL AFFIX TO THEIR ITEM THE WORDS "ALTERED BY" FOLLOWED BY THEIR SIGNATURE AND THE DATE OF SUCH ALTERATION AND A SPECIFIC DESCRIPTION OF THE ALTERATION.

DISCLAIMER

MARK	DESCRIPTION	DATE	APPR
A	ISSUED FOR BID (NOT FOR CONST.)	03/21/2024	

DESIGNED BY: A. Hossaily
DWN BY: A. Hossaily
CKD BY: Checker
SUBMITTED BY:
DATE: 03/21/2024
SOLICITATION NO.:
CONTRACT NO.: 187928
FILE NAME: BIM 360/BIL/F-XX-300000-01 - Peace Bridge GEC - RSP/PARE 3.0 - Discipline/M21.rvt
SIZE: 22" X 34"
PLOTTED BY:
PLOT DATE: 08/01/2024

BUFFALO AND FORT ERIE
PUBLIC BRIDGE AUTHORITY
xx

WSP USA Inc.
44 Hawley Street
Suite 201
Buffalo, N.Y. 14202
(716) 849-1150

BUFFALO AND FORT ERIE PUBLIC
BRIDGE AUTHORITY
PROJECT# XXX PARE 3.0

TRUCK CANOPY SECTIONS

CROSSING PATHS ★ BUILDING FUTURES
THE PEACE BRIDGE

DRAWING
NUMBER
ST301

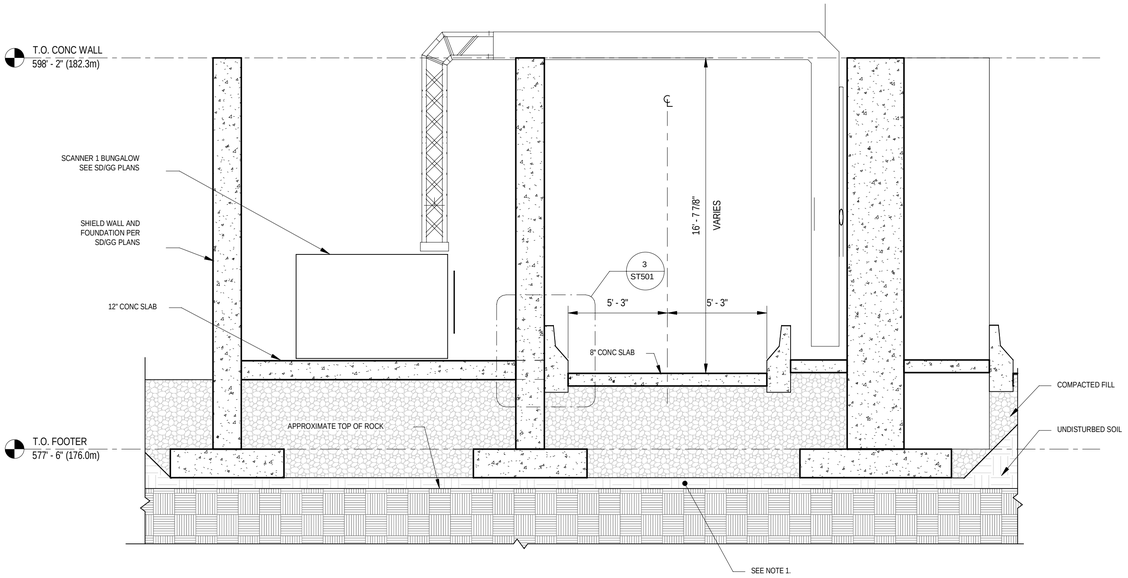

1 ST101 LANE 1 SECTION
1/4" = 1'-0"

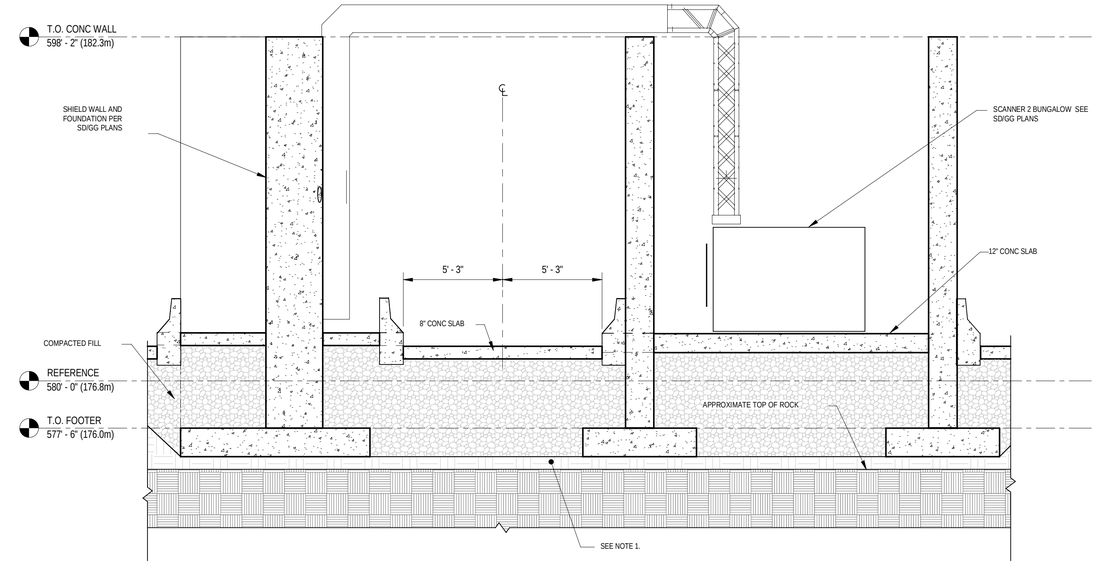

2 ST101 LANE 2 SECTION
1/4" = 1'-0"

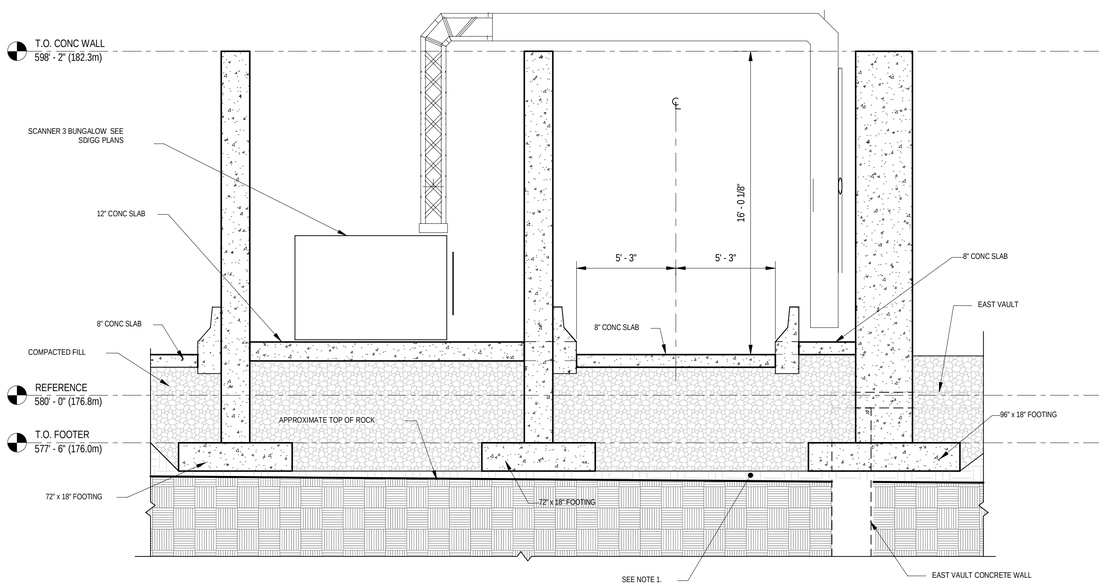

3 ST101 LANE 3 SECTION
1/4" = 1'-0"

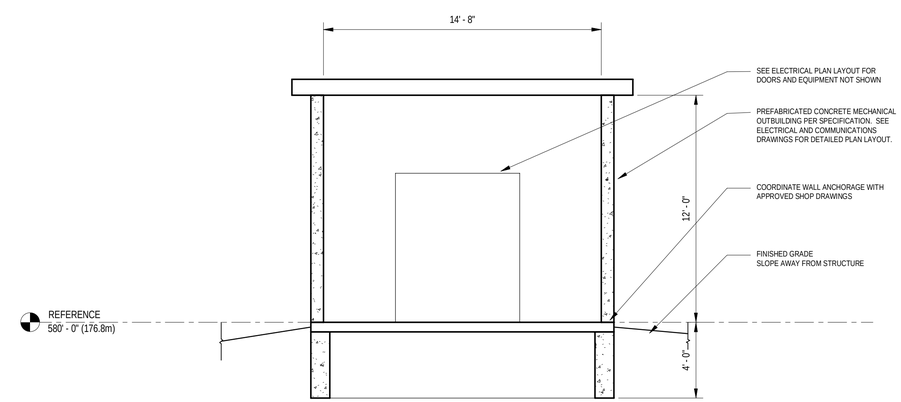

4 ST103 MECHANICAL OUTBUILDING SECTION
1/4" = 1'-0"

NOTES:
1. APPROXIMATE ROCK ELEVATION SHOWN IN ALL SECTIONS. CONTRACTOR SHALL ASSUME A DEPTH OF FOOTING AS SHOWN FOR BID. SHOULD ROCK BE FOUND AT A HIGHER ELEVATION, THE BEARING ELEVATION WILL BE ADJUSTED TO COMPETENT ROCK. SHOULD THE EOR ELECT TO PLACE BEARING DEEPER, ADDITIONAL STEM WALL SHALL BE PROVIDED AT THE CONCRETE UNIT BID PRICE. TYPICAL ALL FOUNDATIONS AT TRUCK CANOPY, SHIELD WALLS, AND SALT BARN.

MARK	DESCRIPTION	DATE	APPR

IT IS A VIOLATION OF THE LAW FOR ANY PERSON, UNLESS ACTING UNDER THE DIRECT SUPERVISION OF A LICENSED ARCHITECT OR ENGINEER, TO ALTER ANYTHING ON THIS DRAWING. IF THIS DRAWING IS ALTERED, THE ALTERING ARCHITECT OR ENGINEER SHALL AFFIX TO THEIR ITEM THE WORDS, "ALTERED BY" FOLLOWED BY THEIR NAME, LICENSE NUMBER, TITLE, SIGNATURE AND THE DATE OF SUCH ALTERATION AND A SPECIFIC DESCRIPTION OF THE ALTERATION.

DISCLAIMER

DESIGNED BY: Designer
DWN BY: Author
CKD BY: Checker
SUBMITTED BY:
DATE: 07/21/2024
SOLICITATION NO.:
CONTRACT NO.: 187928
FILE NAME: BIM 360://Bull-I-DO-S0900041 - Peace Bridge GEC - RD25/PARE 3.0 - Discipline/ST101.rvt
PLOTTED BY:
PLOT DATE: 08/01/2024
SIZE: 22" X 34"

BUFFALO AND FORT ERIE PUBLIC BRIDGE AUTHORITY
xx

WSP USA Inc.
1600 Liberty Building
Suite 200
Buffalo, NY 14202
(716) 853-1220

BUFFALO AND FORT ERIE PUBLIC BRIDGE AUTHORITY
PROJECT# XXX PARE 3.0

TRUCK LANE SECTIONS

CROSSING PATHS ★ BUILDING FUTURES
THE PEACE BRIDGE

DRAWING NUMBER
ST302

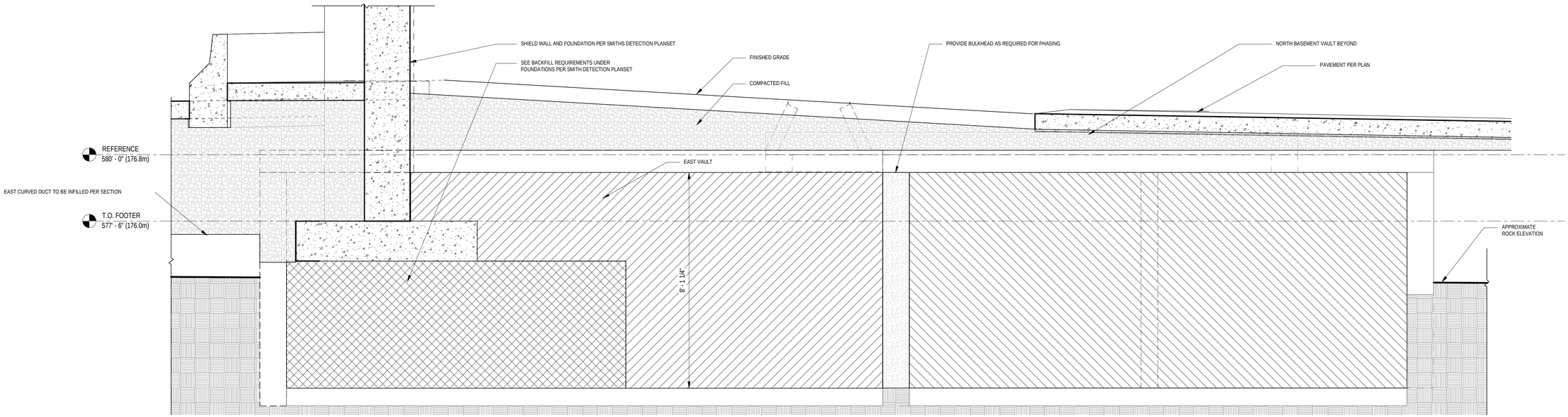

1 ST101 EAST VAULT LONG. VAULT SECTION
1/2" = 1'-0"

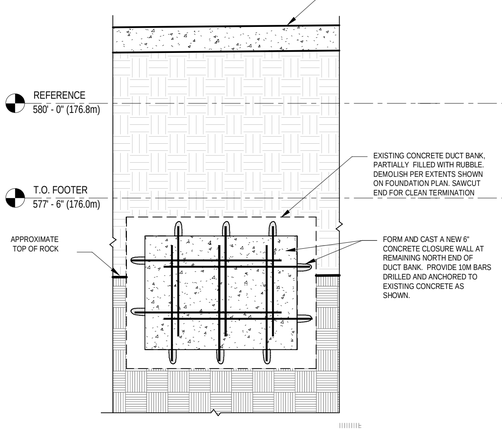

2 ST101 EXIST CURVED DUCT BANK
1/2" = 1'-0"

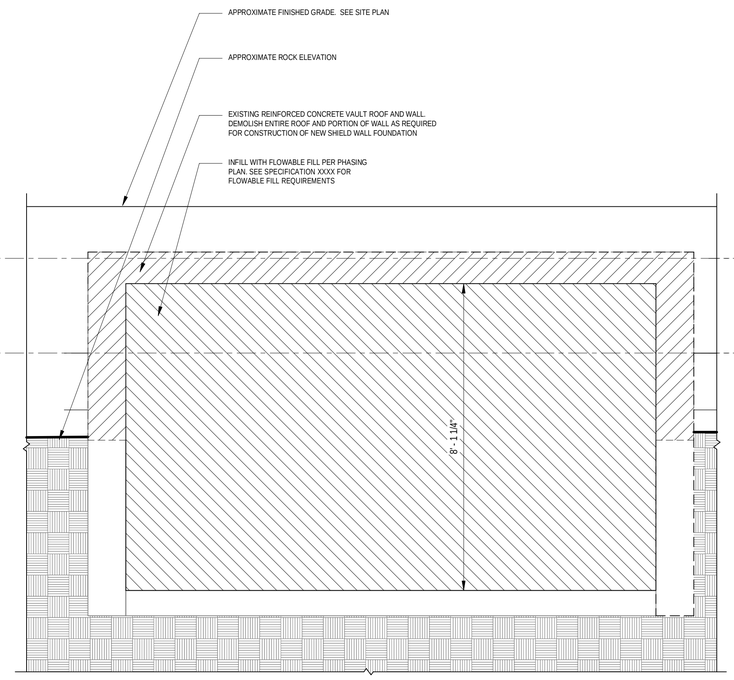

3 ST101 EAST VAULT SECTION
1/2" = 1'-0"

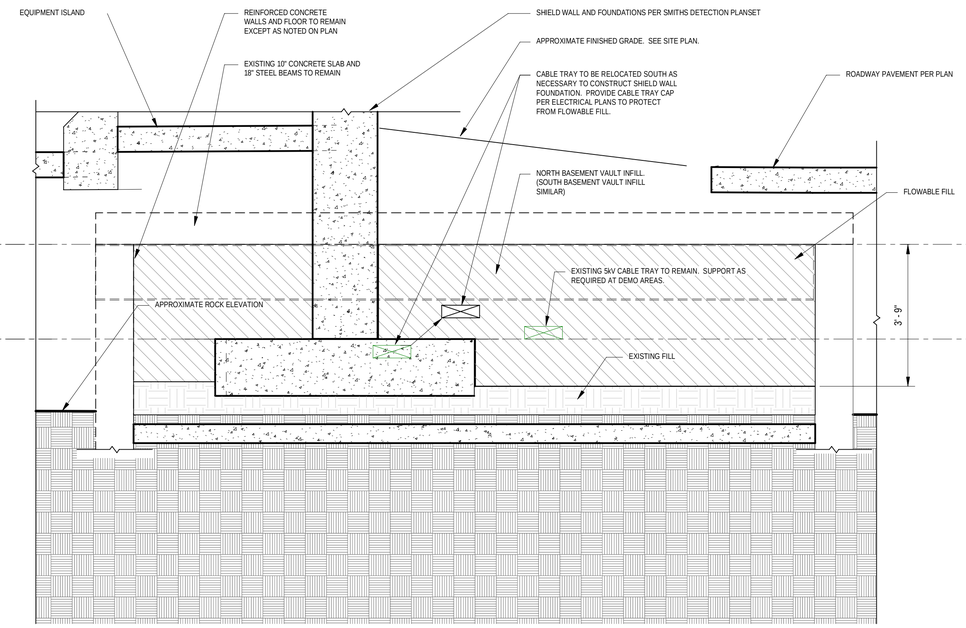

4 ST101 BASEMENT VAULT SECTION
1/2" = 1'-0"

IT IS A VIOLATION OF THE LAW FOR ANY PERSON, UNLESS ACTING UNDER THE DIRECT SUPERVISION OF A LICENSED ARCHITECT OR ENGINEER, TO ALTER ANYTHING ON THIS DRAWING. IF THIS DRAWING IS ALTERED, THE ALTERING ARCHITECT OR ENGINEER SHALL AFFIX TO THEIR ITEM THE WORDS "ALTERED BY" FOLLOWED BY THEIR NAME AND THE DATE OF SUCH ALTERATION AND A SPECIFIC DESCRIPTION OF THE ALTERATION.

DISCLAIMER

MARK	DESCRIPTION	DATE	APPR

DATE: 09/02/2024
SOLICITATION NO.:
CONTRACT NO.: 187928
FILE NAME: BIM 360://BUFJO-JV900041 - Peace Bridge GEC - RC/PARE 3.0 - Section/ST101.rvt
PLOT DATE: 08/01/2024
SIZE: 22" X 34"

DESIGNED BY: Designer
CKD BY: Checker
DWN BY: Author
SUBMITTED BY:
PLOTTED BY:

BUFFALO AND FORT ERIE PUBLIC BRIDGE AUTHORITY
XX

WSP USA Inc.
Buffalo Corporate Drive
Suite 310
Buffalo, N.Y. 14202
(716) 849-1150

BUFFALO AND FORT ERIE PUBLIC BRIDGE AUTHORITY
PROJECT# XXX PARE 3.0

VAULT INFILL SECTIONS (1/2)

CROSSING PATHS ★ BUILDING FUTURES
THE PEACE BRIDGE

DRAWING NUMBER
ST303

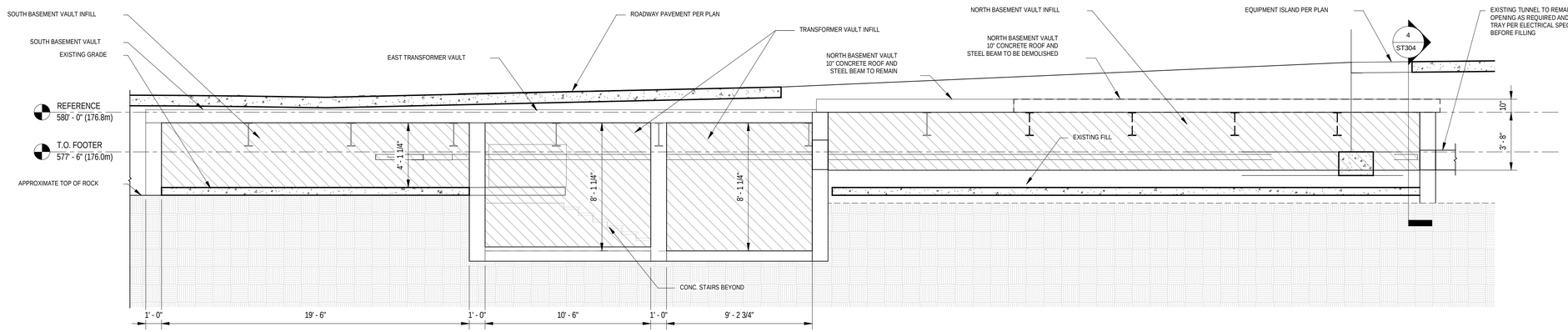

1 ST102 SOUTH AND NORTH VAULTS LONG. SECTION
1/4" = 1'-0"

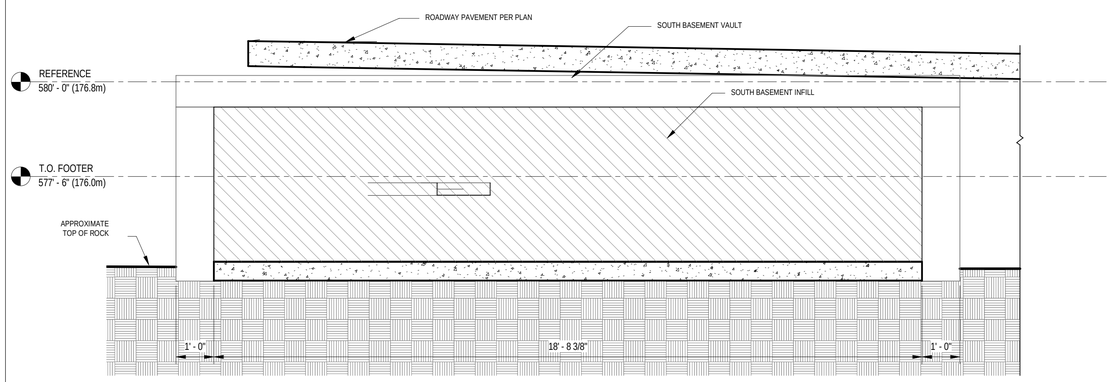

2 ST102 SOUTH BASEMENT VAULT TRANSVERSE SECTION
1/2" = 1'-0"

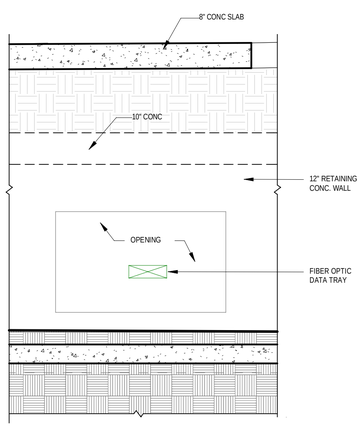

4 ST102 SECTION
1/2" = 1'-0"

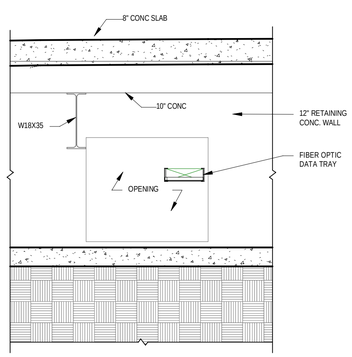

5 ST102 SECTION
1/2" = 1'-0"

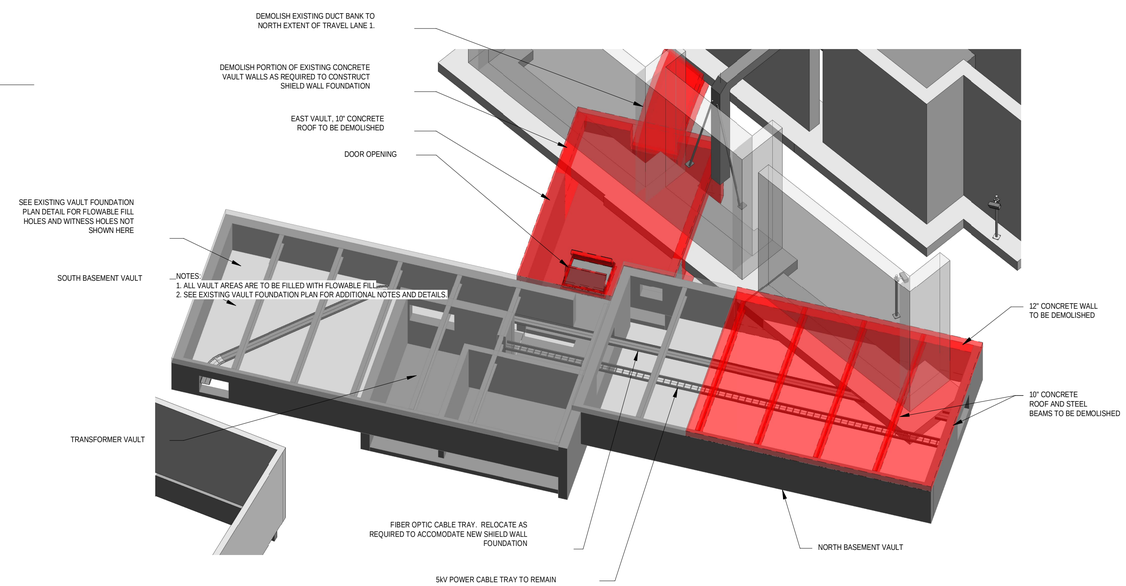

EXISTING VAULTS ISOMETRIC VIEW

MARK	DESCRIPTION	DATE	APPR

IT IS A VIOLATION OF THE LAW FOR ANY PERSON, UNLESS ACTING UNDER THE DIRECT SUPERVISION OF A LICENSED ARCHITECT OR ENGINEER, TO ALTER ANYTHING ON THIS DRAWING. IF THIS DRAWING IS ALTERED, THE ALTERING ARCHITECT OR ENGINEER SHALL AFFIX TO THEIR ITEM THE SEAL AND THE WORDS "ALTERED BY" FOLLOWED BY THEIR SIGNATURE AND THE DATE OF SUCH ALTERATION AND A SPECIFIC DESCRIPTION OF THE ALTERATION.

DISCLAIMER

DESIGNED BY: Designer
DWN BY: Author
CKD BY: Checker
SUBMITTED BY:
DATE: 00/00/2024
SOLICITATION NO.:
CONTRACT NO.: 187928
FILE NAME: BIM 360://BUF-00-30000-01 - Peace Bridge GEC - RIDSPIKE 1.0 - Structural R21.rvt
SIZE: 22" X 34"
PLOTTED BY:
PLOT DATE: 08/01/2024

BUFFALO AND FORT ERIE PUBLIC BRIDGE AUTHORITY
XX

WSP USA, Inc.
1 Penn Plaza, 9th Floor
Suite 914
New York, NY 10119
(716) 783-1120

BUFFALO AND FORT ERIE PUBLIC BRIDGE AUTHORITY
PROJECT# XXX PARE 3.0

VAULT INFILL SECTIONS (2/2)

CROSSING PATHS BUILDING FUTURES
THE PEACE BRIDGE

DRAWING NUMBER
ST304

NOTE:
1. ALL BAR TO BE GALVANIZED EXCEPT FOR FOOTING REINFORCEMENT. SEE CONCRETE NOTES.

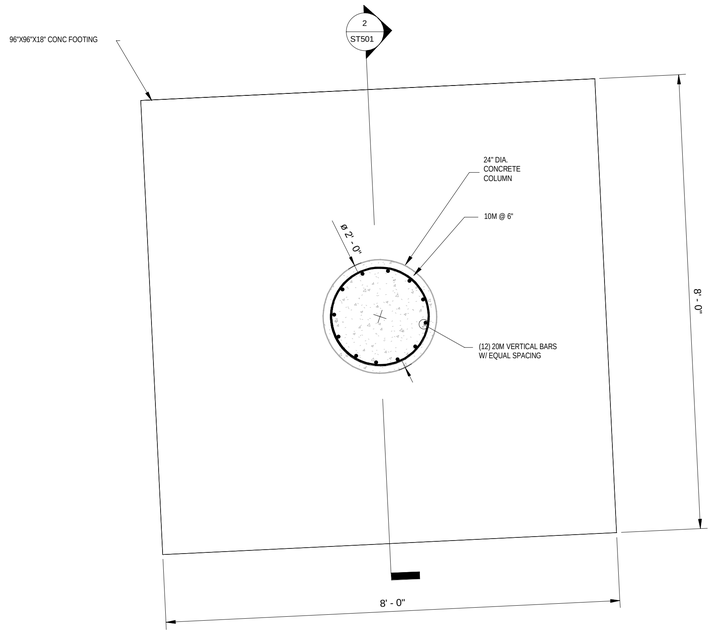

1 ST101 TYPICAL CANOPY FOUNDATION PLAN DETAIL
3/4" = 1'-0"

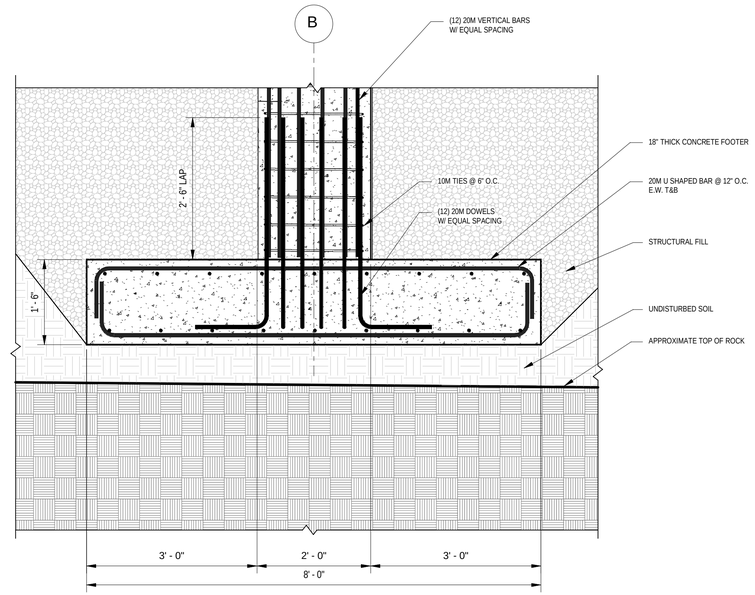

2 TYPICAL CANOPY FOUNDATION SECTION
3/4" = 1'-0"

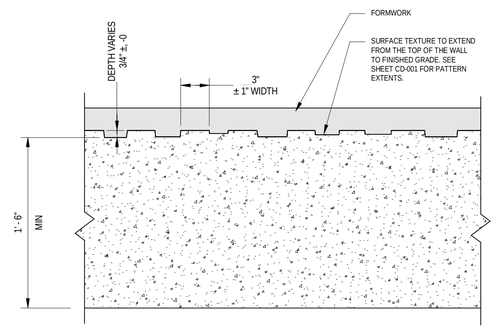

CONC. WALL TOP VIEW

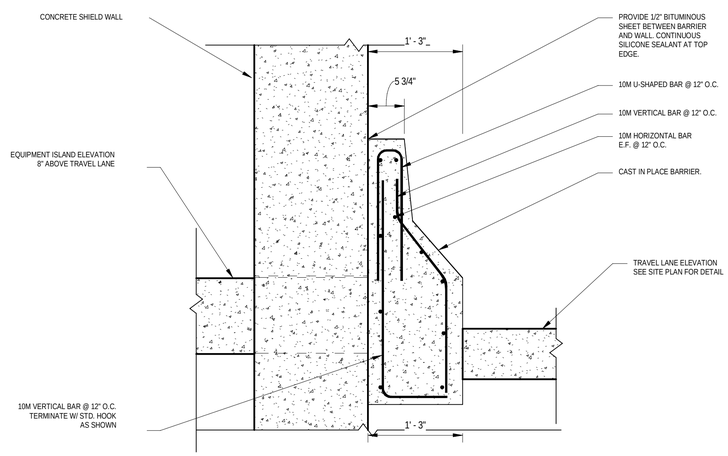

3 ST302 TYPICAL CIP LANE BARRIER DETAIL
1" = 1'-0"

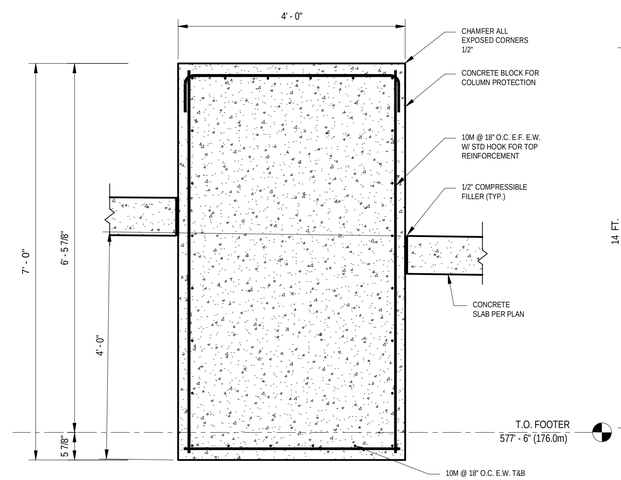

4 ST101 TYPICAL COLUMN PROTECTION REINFORCEMENT DETAIL
3/4" = 1'-0"

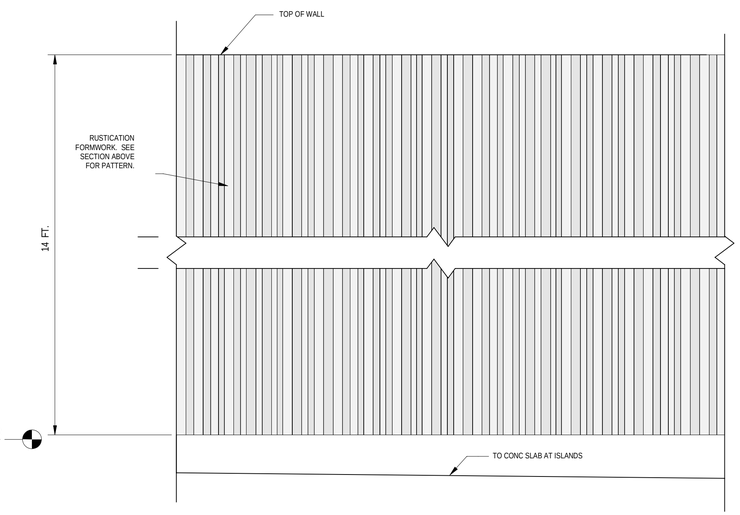

FRONT VIEW

5 RCP DETAIL - TYPICAL BOARD FORM PATTERN
1/2" = 1'-0"

MARK	DESCRIPTION	DATE	APPR
A	ISSUED FOR BID (NOT FOR CONST.)	03/21/2024	

DISCLAIMER

IT IS A VIOLATION OF THE LAW FOR ANY PERSON, UNLESS ACTING UNDER THE DIRECT SUPERVISION OF A LICENSED ARCHITECT OR ENGINEER, TO ALTER ANY ITEM ON THIS DOCUMENT. IF AN ITEM BEARING THE STAMP OF AN ARCHITECT OR ENGINEER IS ALTERED, ALTERING ARCHITECT OR ENGINEER SHALL AFFIX TO THEIR ITEM THE LEGEND "ALTERED BY" FOLLOWED BY THEIR SIGNATURE AND THE TITLE, SIGNATURE AND THE DATE OF SUCH ALTERATION AND A SPECIFIC DESCRIPTION OF THE ALTERATION.

DESIGNED BY: A. Hussainy
DWN BY: A. Hossaitry
SUBMITTED BY:
CKD BY: Checker
DATE: 03/21/2024
SOLICITATION NO.:
CONTRACT NO.: 187928
FILE NAME: BIM 360://BUF-100-3090041 - Peace Bridge GEC - RCP/Part 2.0 - Subconsult/2.1.rvt
PLOTTED BY:
PLOT DATE: 08/01/2024
SIZE: 22" X 34"

BUFFALO AND FORT ERIE PUBLIC BRIDGE AUTHORITY
XX

WSP USA Inc.
Buffalo Corporate Drive
Amherst, NY, 14226
(716) 688-1230

BUFFALO AND FORT ERIE PUBLIC BRIDGE AUTHORITY
PROJECT# XXX PARE 3.0

TRUCK CANOPY CONCRETE DETAILS

CROSSING PATHS ★ BUILDING FUTURES
THE PEACE BRIDGE

DRAWING NUMBER
ST501

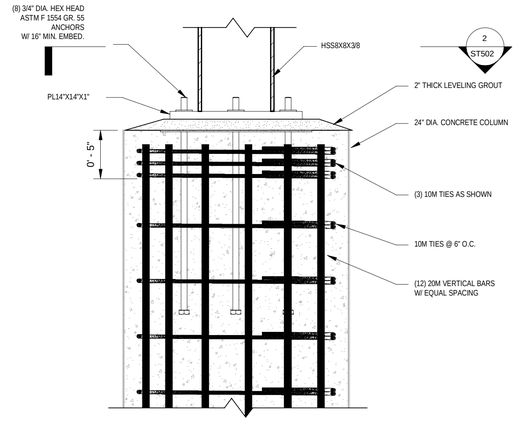

1 ST301 TYPICAL BASE PLATE AND ANCHOR DETAIL
1 1/2" = 1'-0"

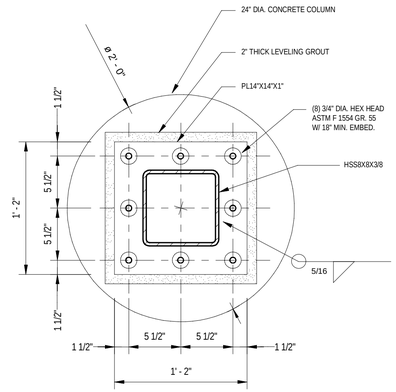

2 ST502 TYPICAL BASE PLATE PLAN DETAIL
1 1/2" = 1'-0"

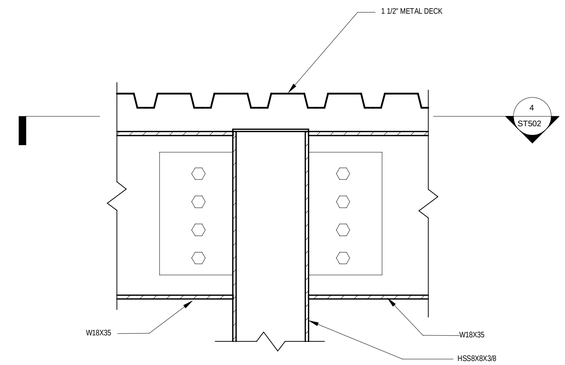

3 ST301 TYPICAL BEAM TO COLUMN CONNECTION SECTION DETAIL
1 1/2" = 1'-0"

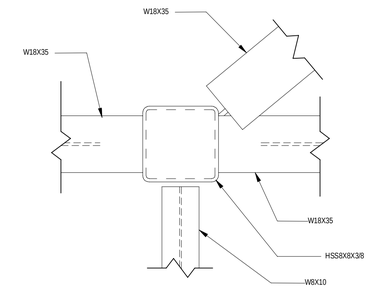

4 ST502 TYPICAL BEAM TO COLUMN CONNECTION PLAN DETIAL
1 1/2" = 1'-0"

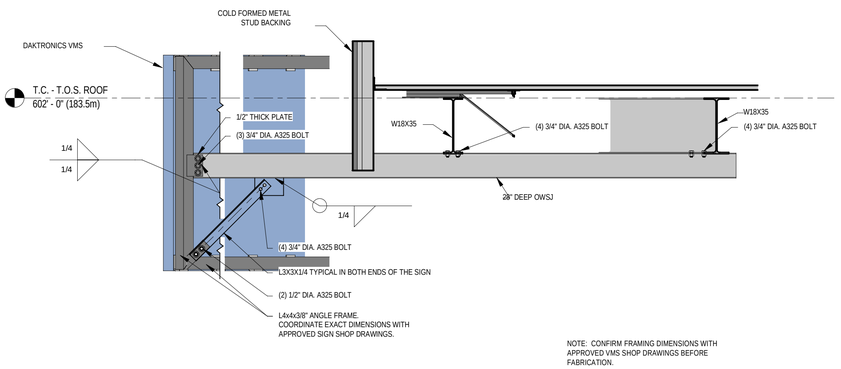

NOTE: CONFIRM FRAMING DIMENSIONS WITH APPROVED VMS SHOP DRAWINGS BEFORE FABRICATION.

5 ST104 TYPICAL VMS SUPPORT SECTION
1/2" = 1'-0"

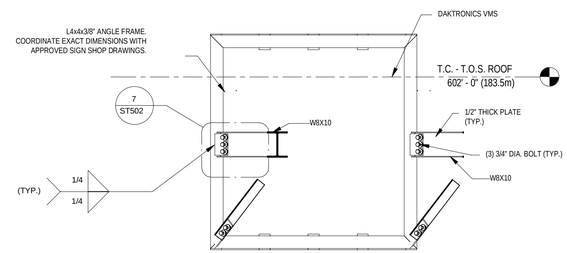

6 ST104 TYPICAL VMS SUPPORT SECTION 2/2
1/2" = 1'-0"

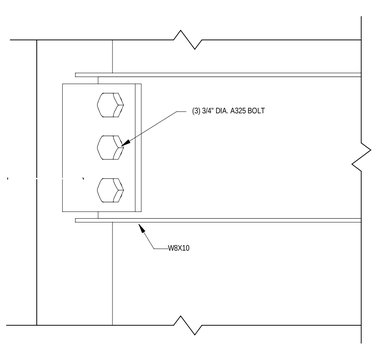

7 ST502 TYPICAL MOUNTING DETAIL
3" = 1'-0"

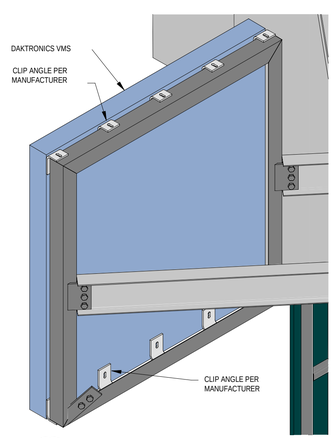

8 TYPICAL VMS MOUNTING ISOMETRIC VIEW

IT IS A VIOLATION OF THE LAW FOR ANY PERSON, UNLESS ACTING UNDER THE DIRECT SUPERVISION OF A LICENSED ARCHITECT OR ENGINEER, TO ALTER ANY ITEM ON THIS DOCUMENT. IF AN ALTERATION IS MADE, THE ALTERING ARCHITECT OR ENGINEER SHALL AFFIX TO THEIR ITEM THE WORDS "ALTERED BY" FOLLOWED BY THEIR SIGNATURE AND THE SPECIFIC DESCRIPTION OF THE ALTERATION.

DISCLAIMER

MARK	DESCRIPTION	DATE	APPR
A	ISSUED FOR BID (NOT FOR CONST.)	03/21/2024	

DATE: 03/21/2024
SOLICITATION NO.:
CONTRACT NO.: 187928
PILOT DATE: 03/01/2024
DESIGNED BY: A. Hessaily
DWN BY: A. Hessaily
CKD BY: Checker
SUBMITTED BY:
FILE NAME: BIM 360://BUF-100-3000041 - Peace Bridge/Project Files/Models/R23/PARE 3.0 - Structural/21.rvt
SIZE: 22" X 34"
PLOTTED BY:

BUFFALO AND FORT ERIE
PUBLIC BRIDGE AUTHORITY

xx

WSP USA Inc.
44 Hawley Street, Suite 1700
Buffalo, NY 14202
(716) 849-1200

BUFFALO AND FORT ERIE PUBLIC
BRIDGE AUTHORITY
PROJECT# XXX PARE 3.0

TRUCK CANOPY FRAMING DETAILS

CROSSING PATHS BUILDING FUTURES
THE PEACE BRIDGE

DRAWING
NUMBER

ST502

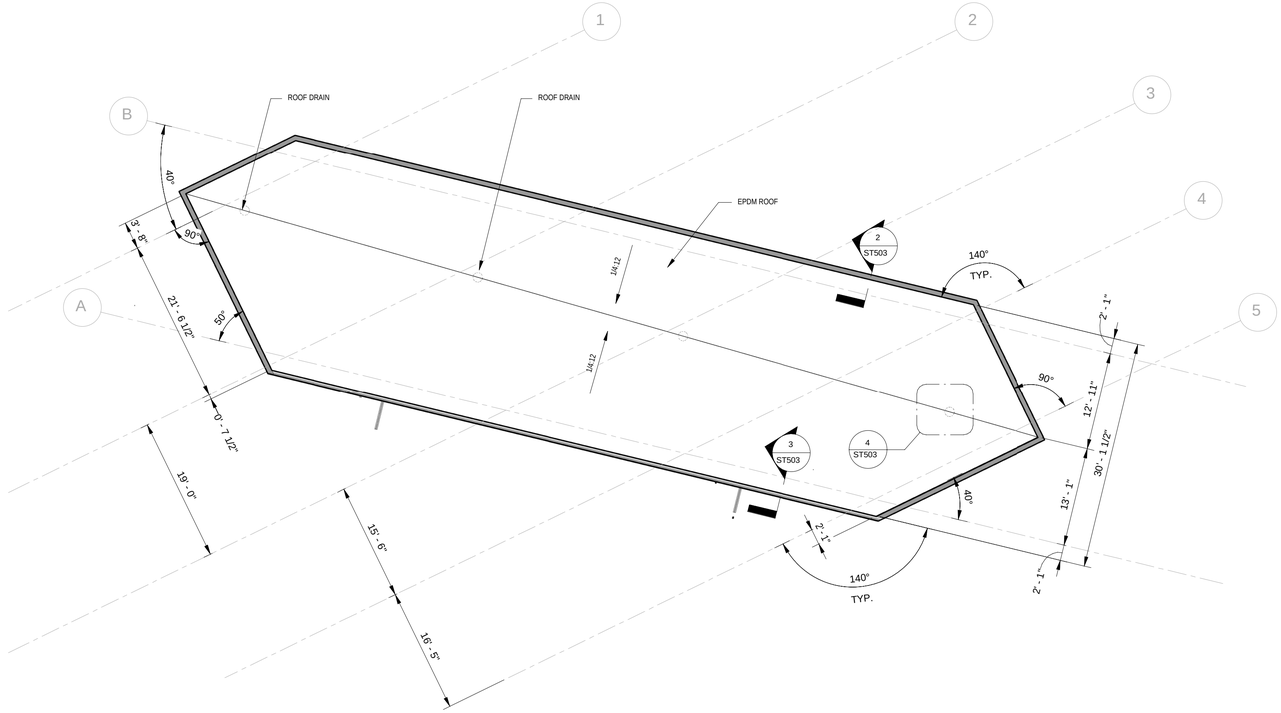

ROOF PLAN
1" = 10'-0"

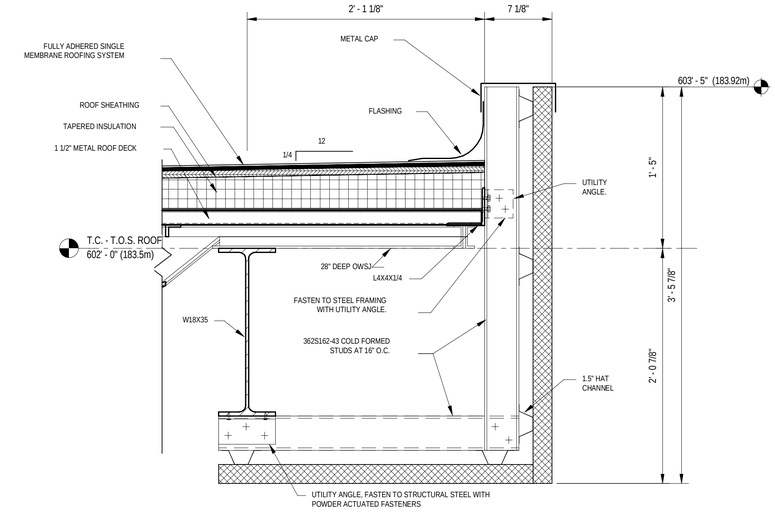

2 / ST104 — TYPICAL ROOF DETAIL (1/2)
1 1/2" = 1'-0"

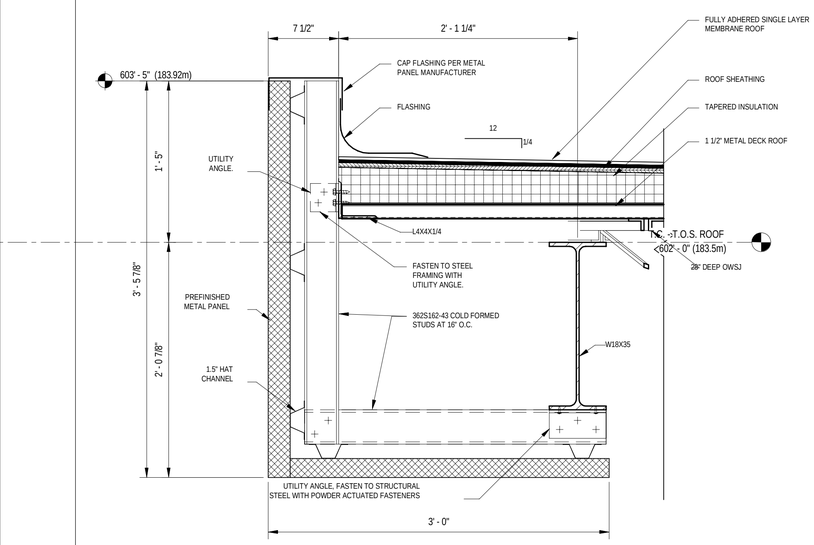

3 / ST104 — TYPICAL ROOF DETAIL (2/2)
1 1/2" = 1'-0"

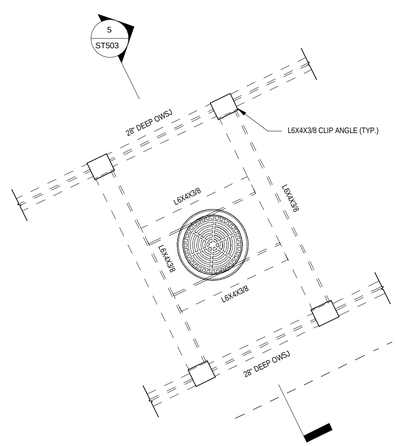

4 / ST503 — TYPICAL ROOF DRAIN PLAN
3/4" = 1'-0"

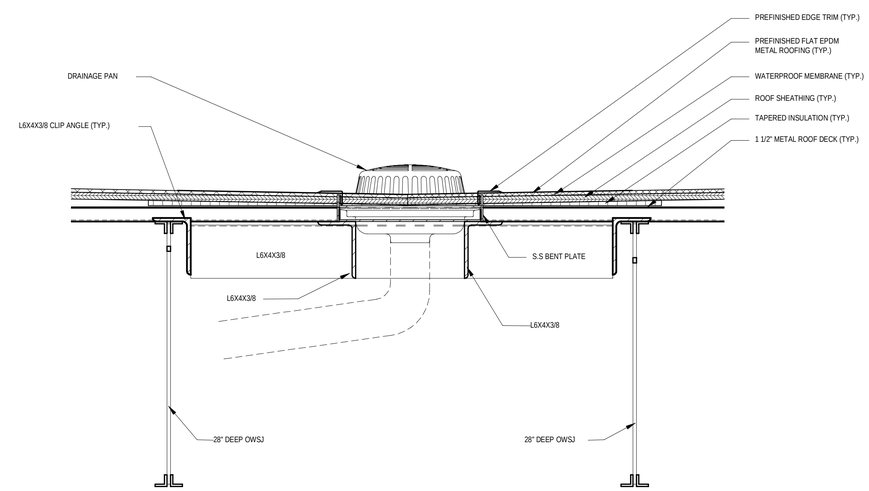

5 / ST503 — TYPICAL ROOF DRAIN SECTION
1 1/2" = 1'-0"

DISCLAIMER

IT IS A VIOLATION OF THE LAW FOR ANY PERSON, UNLESS ACTING UNDER THE DIRECT SUPERVISION OF A LICENSED ARCHITECT OR ENGINEER, TO ALTER AN ITEM IN ANY WAY. IF AN ITEM BEARING THE SEAL OF AN ARCHITECT OR ENGINEER IS ALTERED, THE ALTERING ARCHITECT OR ENGINEER SHALL AFFIX TO THEIR ITEM THE WORDS "ALTERED BY" FOLLOWED BY THEIR SIGNATURE AND THE SPECIFIC DESCRIPTION OF THE ALTERATION.

MARK	DESCRIPTION	DATE	APPR
A	ISSUED FOR BID (NOT FOR CONST.)	03/21/2024	

DESIGNED BY: Designer
DWN BY: Author
CKD BY: Checker
SUBMITTED BY:
DATE: 03/21/2024
SOLICITATION NO.:
CONTRACT NO.: 187928
FILE NAME: BIM 360://BUF-300000441 - Peace Bridge GEC - RSDP-ME-2.0 - Discipline Folder
PLOTTED BY:
PLOT DATE: 03/21/2024
SIZE: 22" X 34"

BUFFALO AND FORT ERIE PUBLIC BRIDGE AUTHORITY
xx

WSP USA Inc.
Buffalo Corporate Drive
Buffalo, N.Y. 14202
(716) 849-1150

BUFFALO AND FORT ERIE PUBLIC BRIDGE AUTHORITY
PROJECT# XXX PARE 3.0

TRUCK CANOPY ROOFING AND FASCIA DETAILS

CROSSING PATHS BUILDING FUTURES THE PEACE BRIDGE

DRAWING NUMBER
ST503

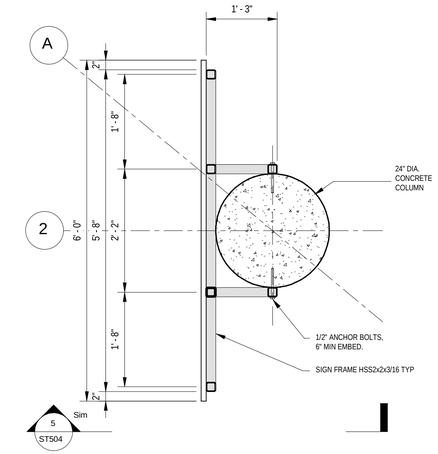

6 / ST103 TRUCK CANOPY - SIGN FRAMING DETAIL AT GRIDLINE 1 AND 2
3/4" = 1'-0"

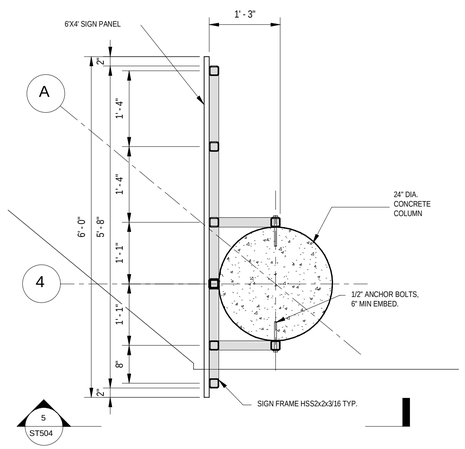

1 / ST103 TRUCK CANOPY - SIGN FRAMING DETAIL AT GRIDLINE 4
3/4" = 1'-0"

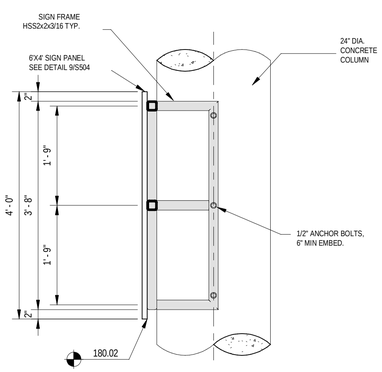

5 / ST504 SECTION
3/4" = 1'-0"

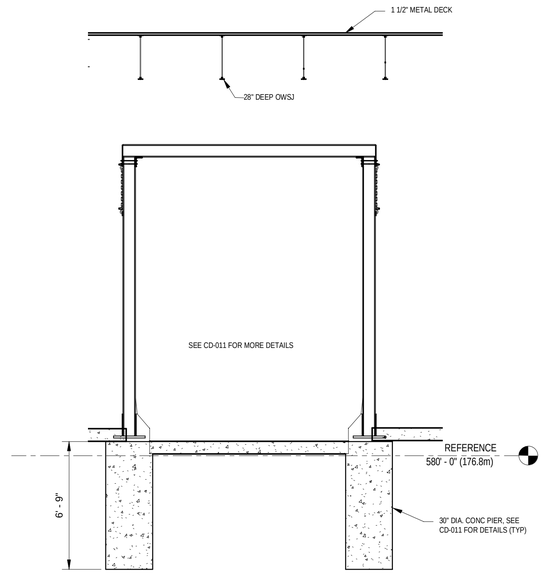

2 / ST104 TYPICAL OVERHEIGHT BAR STRUCTURE SECTION
1/4" = 1'-0"

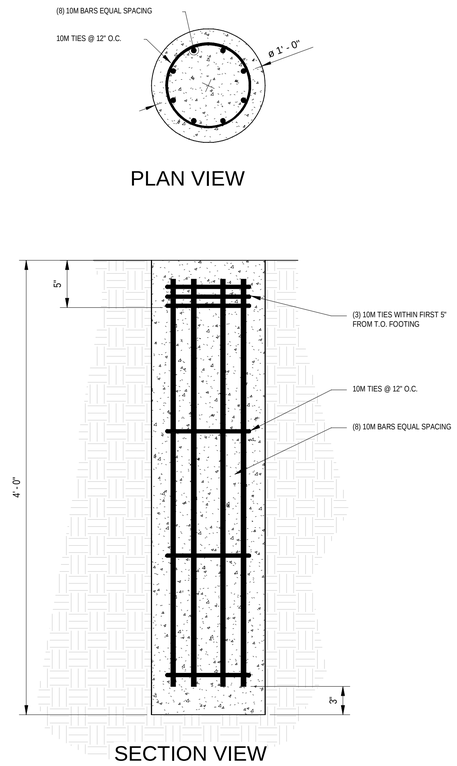

3 / TYPICAL FENCING FOUNDATION
1 1/2" = 1'-0"

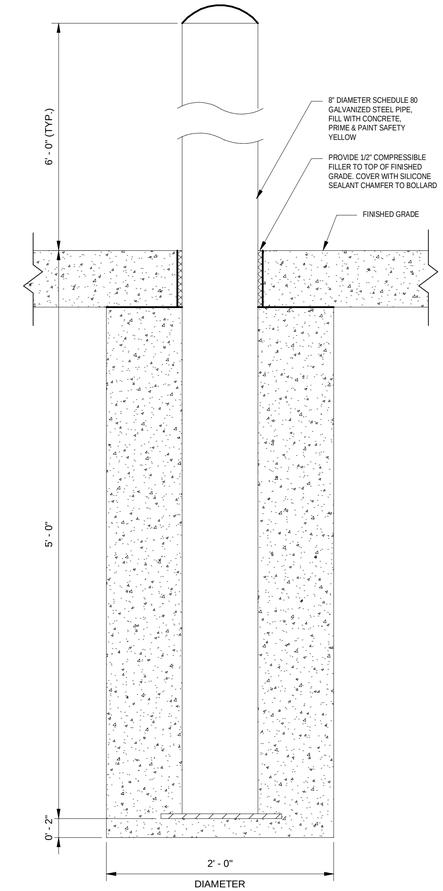

4 / TYPICAL PROTECTIVE BOLLARD DETAIL
1 1/2" = 1'-0"

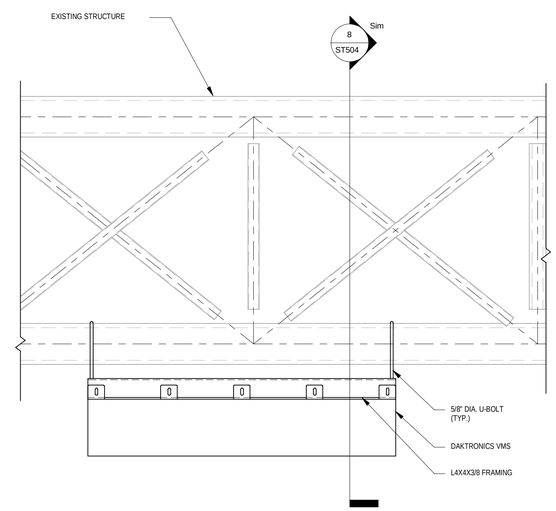

7 / TYPICAL GANTRY SIGN ATTACHEMENT PLAN DETAIL
3/4" = 1'-0"

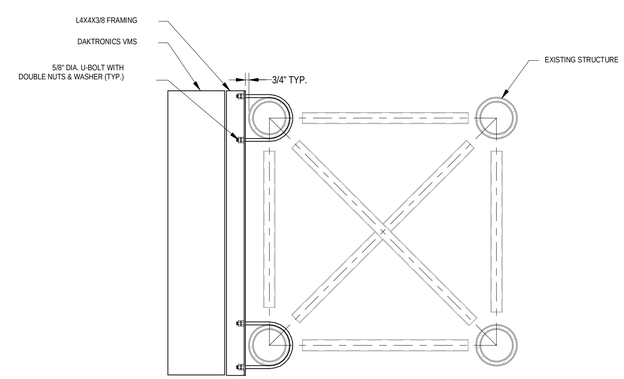

8 / TYPICAL GANTRY SIGN ATTACHEMENT SECTION DETAIL
3/4" = 1'-0"

6' - 0"

4' - 0"

ALL VEHICLES AND OCCUPANTS ARE SUBJECT TO INSPECTION. ALL VEHICLES WILL BE SCANNED USING EXTREMELY LOW LEVEL X-RAYS, WITHIN THE HEALTH AND SAFETY LIMITS ALLOWABLE FOR MEMBERS OF THE PUBLIC.

9 / 6'X4' INFORMATIONAL SIGN
3/4" = 1'-0"

IT IS A VIOLATION OF THE LAW FOR ANY PERSON, UNLESS ACTING UNDER THE DIRECT SUPERVISION OF A LICENSED ARCHITECT OR ENGINEER, TO ALTER OR ALTER BY ANY MEANS, ANY ITEM BEARING THE SEAL OF AN ARCHITECT OR ENGINEER. IF AN ITEM BEARING ALTERING ARCHITECT OR ENGINEER SHALL AFFIX TO THEIR ITEM THE WORDS "ALTERED BY" FOLLOWED BY THEIR SIGNATURE AND THE DATE OF SUCH ALTERATION AND A SPECIFIC DESCRIPTION OF THE ALTERATION.

DISCLAIMER

MARK	DESCRIPTION	DATE	APPR
A	ISSUED FOR BID (NOT FOR CONST.)	03/21/2024	

DESIGNED BY: A. Hossainy
DWN BY: A. Hossainy
CKD BY: Checker
SUBMITTED BY:
DATE: 03/21/2024
SOLICITATION NO.:
CONTRACT NO.: 187928
FILE NAME: BIM 360://BUF-00-30000-01 - Peace Bridge GEC - R22/PARE 3.0 - Structural R21.rvt
SIZE: 22" X 34"
PLOTTED BY:
PLOT DATE: 03/01/2024

BUFFALO AND FORT ERIE PUBLIC BRIDGE AUTHORITY
xx

WSP USA, Inc.
1395 Wehrle Drive
Suite 14
Williamsville, NY 14221
(716) 943-1120

BUFFALO AND FORT ERIE PUBLIC
BRIDGE AUTHORITY
PROJECT# XXX PARE 3.0

TRUCK CANOPY MISC. DETAILS

CROSSING PATHS BUILDING FUTURES
THE PEACE BRIDGE

DRAWING NUMBER
ST504

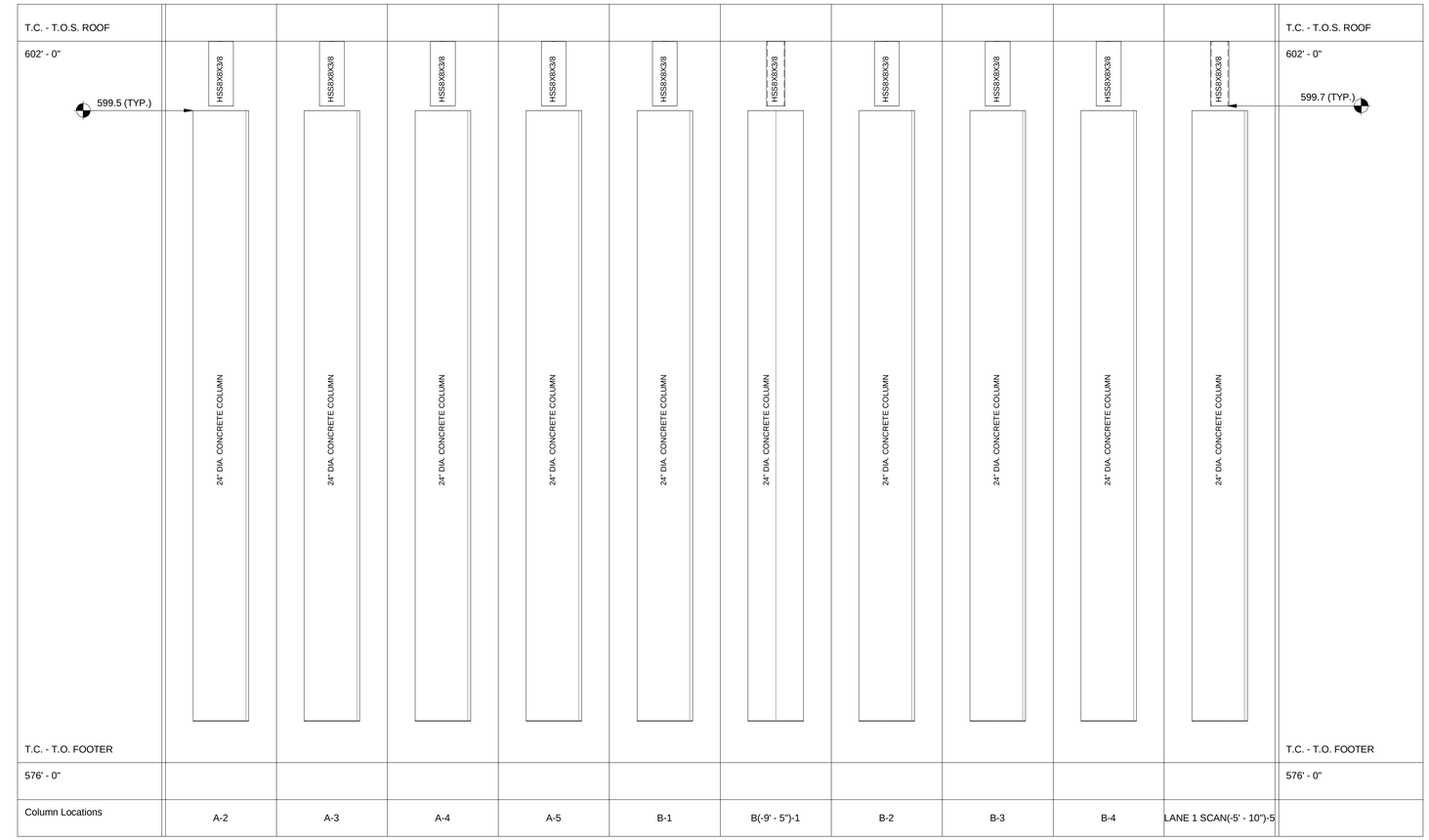

Column Locations	A-2	A-3	A-4	A-5	B-1	B(-9' - 5")-1	B-2	B-3	B-4	LANE 1 SCAN(-5' - 10")-5

TRUCK CANOPY COLUMN SCHEDULE
3/8" = 1'-0"

IT IS A VIOLATION OF THE LAW FOR ANY PERSON, UNLESS ACTING UNDER THE DIRECT SUPERVISION OF A LICENSED ARCHITECT OR ENGINEER, TO ALTER AN ITEM IN ANY WAY. IF AN ITEM BEARING THE SEAL OF AN ARCHITECT OR ENGINEER IS ALTERED, THE ALTERING ARCHITECT OR ENGINEER SHALL AFFIX TO THEIR ITEM THE SEAL AND THE WORDS "ALTERED BY" FOLLOWED BY THEIR SIGNATURE AND THE DATE OF SUCH ALTERATION AND A SPECIFIC DESCRIPTION OF THE ALTERATION.

DISCLAIMER

MARK	DESCRIPTION	DATE	APPR

DESIGNED BY: A. Hossaily
DWN BY: A. Hossaily
CKD BY: Checker
SUBMITTED BY:
DATE: 09/01/2024
SOLICITATION NO.:
CONTRACT NO.: 187928
FILE NAME: BIM 360/BUF-DO-30000041 - Peace Bridge GEC - RSDP/AE 3.0 - Discipline/R21.rvt
PLOTTED BY:
PLOT DATE: 08/01/2024
SIZE: 22" X 34"

BUFFALO AND FORT ERIE
PUBLIC BRIDGE AUTHORITY
xx

WSP USA Inc.
1 Robert Speck Pkwy
Suite 300
Mississauga, ON L4Z 1S1
(289) 835-1940

BUFFALO AND FORT ERIE PUBLIC
BRIDGE AUTHORITY
PROJECT# XXX PARE 3.0

TRUCK CANOPY COLUMN SCHEDULE

CROSSING PATHS BUILDING FUTURES
THE PEACE BRIDGE

DRAWING NUMBER
ST601

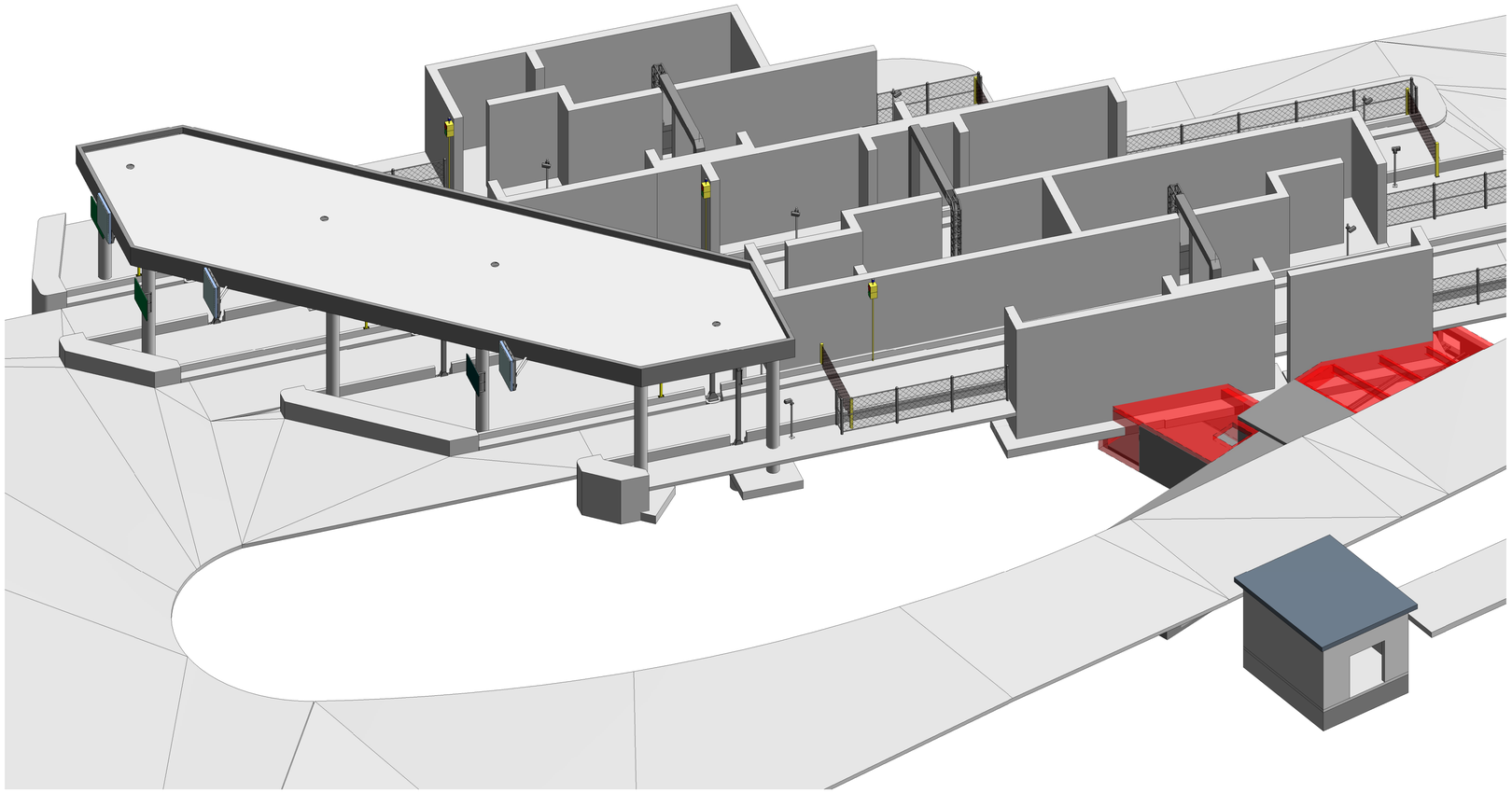

1 TRUCK CANOPY ISOMETRIC VIEW

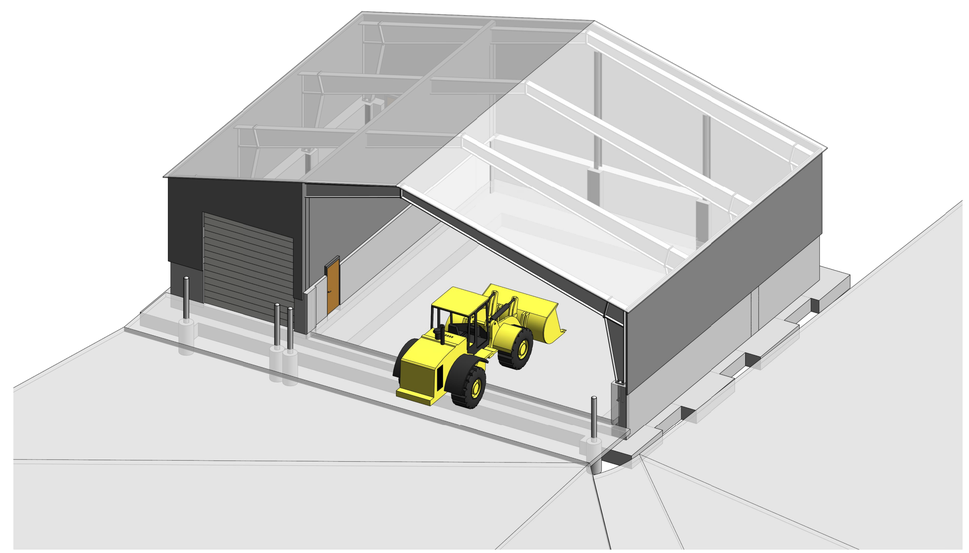

2 SALT SHED ISOMETRIC VIEW

IT IS A VIOLATION OF THE LAW FOR ANY PERSON, UNLESS ACTING UNDER THE DIRECT SUPERVISION OF A LICENSED ARCHITECT OR ENGINEER, TO ALTER AN ITEM IN ANY WAY. IF AN ITEM BEARING THE SEAL OF AN ARCHITECT OR ENGINEER IS ALTERED, ALTERING ARCHITECT OR ENGINEER SHALL AFFIX TO THEIR ITEM THE WORDS "ALTERED BY" FOLLOWED BY THEIR SIGNATURE AND THE DATE OF SUCH ALTERATION AND A SPECIFIC DESCRIPTION OF THE ALTERATION.

MARK	DESCRIPTION	DATE	APPR
A	ISSUED FOR BID (NOT FOR CONST.)	03/21/2024	

DISCLAIMER

DESIGNED BY: A. Hossaily
DWN BY: A. Hossaily
CKD BY: Checker
SUBMITTED BY:
DATE: 03/21/2024
SOLICITATION NO.:
CONTRACT NO.: 187928
FILE NAME: BIM 360/BUF-DO-3000001 - Peace Bridge GEC - RSDP/AE 3.0 - Structural/R21.rvt
PLOTTED BY:
PLOT DATE: 03/21/2024
SIZE: 22" X 34"

BUFFALO AND FORT ERIE
PUBLIC BRIDGE AUTHORITY
xx

WSP USA Inc.
1 Robert Speck Drive
Suite 204
Amherst, NY, 14228
(716) 633-1150

BUFFALO AND FORT ERIE PUBLIC
BRIDGE AUTHORITY
PROJECT# XXX PARE 3.0

TRUCK CANOPY FRAMING ISOMETRICS
VIEW

CROSSING PATHS BUILDING FUTURES
THE PEACE BRIDGE

DRAWING NUMBER

ST901

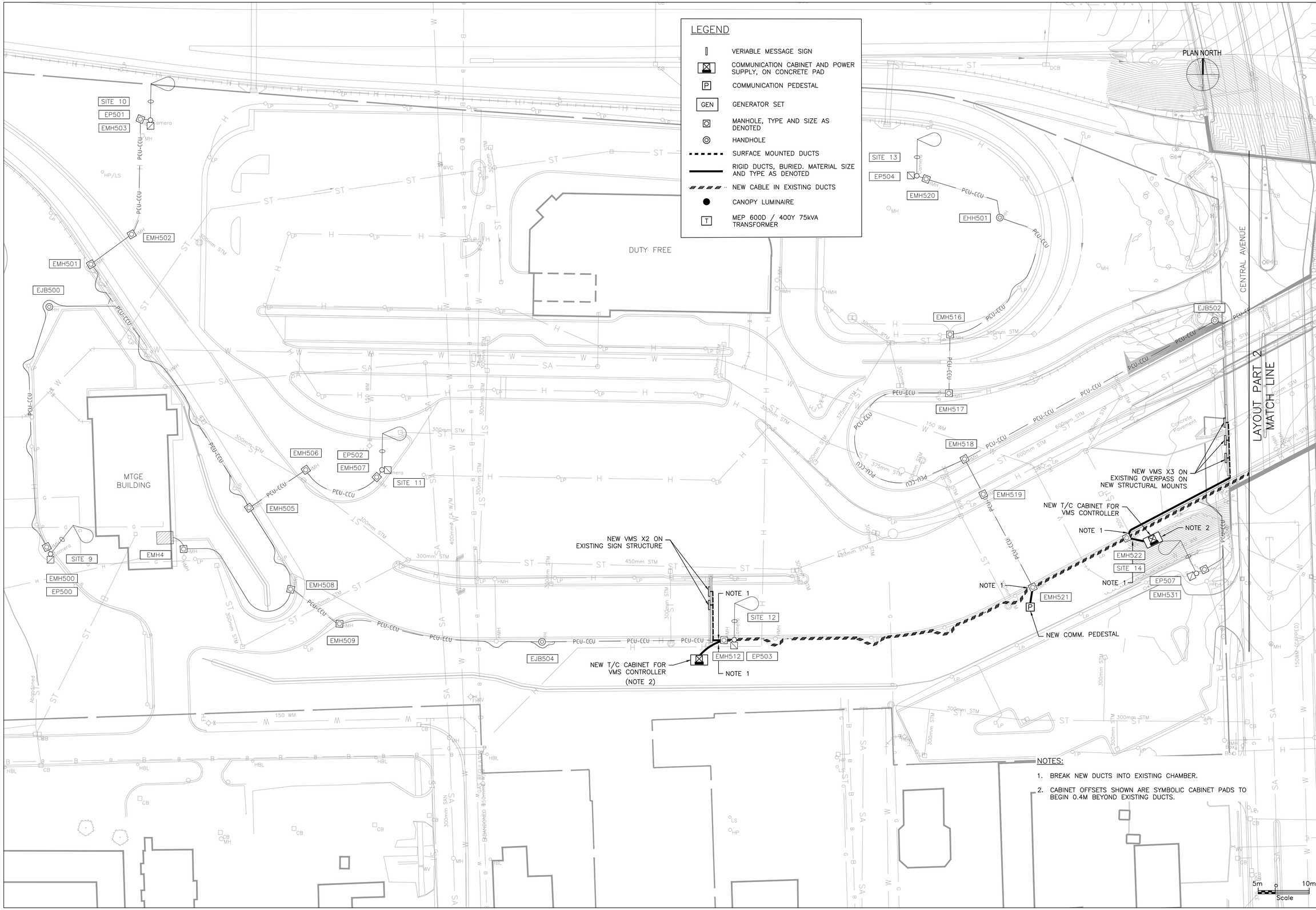

NOTES:

1. BREAK NEW DUCTS INTO EXISTING CHAMBER.
2. CABINET OFFSETS SHOWN ARE SYMBOLIC CABINET PADS TO BEGIN 0.4M BEYOND EXISTING DUCTS.

IT IS A VIOLATION OF THE LAW FOR ANY PERSON, UNLESS ACTING UNDER THE DIRECT SUPERVISION OF A LICENSED ARCHITECT OR ENGINEER, TO ALTER AN ITEM IN ANY WAY. IF AN ITEM BEARING THE SEAL OF AN ARCHITECT OR ENGINEER IS ALTERED, THE ALTERING ARCHITECT OR ENGINEER SHALL AFFIX TO THEIR ITEM THE SEAL AND THE NOTATION "ALTERED BY" FOLLOWED BY THEIR SIGNATURE AND THE DATE OF SUCH ALTERATION AND A SPECIFIC DESCRIPTION OF THE ALTERATION.

MARK	DESCRIPTION	DATE	APPR.
A	ISSUED FOR BID (NOT FOR CONST)	02/16/2024	

DESIGNED BY: MIKE J. WILDE
DWN BY: N.F.G
CKD BY: M.J.W.
SUBMITTED BY: WSP CANADA
FILE NAME: C:\pw_work\wsp-ca18\pms08629\A20M-00635-00-N01.dwg
PLOTTED BY: N.G.
SIZE: 22" X 34"
DATE: 01/09/2024
SOLICITATION NO.:
CONTRACT NO.:
PLOT DATE: 02/16/2024

BUFFALO AND FORT ERIE PUBLIC BRIDGE AUTHORITY

WSP USA Inc.
401 Lafayette Drive
Suite 20
Cheektowaga, NY, 14202
(716) 853-1220

CROSSING PATHS ★ BUILDING FUTURES
THE PEACE BRIDGE

BUFFALO AND FORT ERIE PUBLIC BRIDGE AUTHORITY
PROJECT# XXX PARE 3.0

SITE PLAN LAYOUT
PART 1

DRAWING NUMBER
E1

C:\pw_work\wsp-ca18\pms08629\A20M-00635-00-N01.dwg Fri, 16 Feb 2024 - 3:42pm GaroldeN

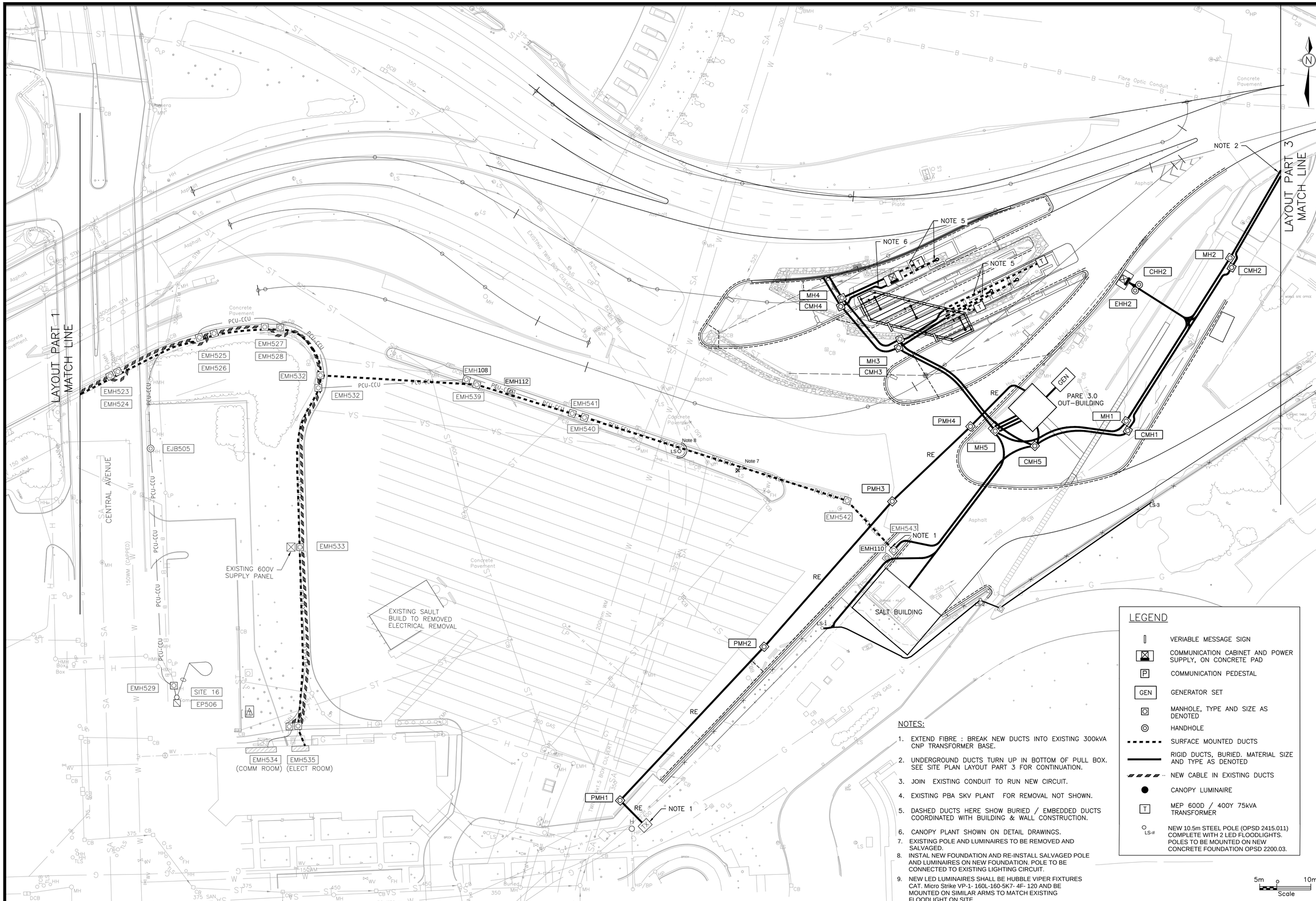

LEGEND

	VERIABLE MESSAGE SIGN
	COMMUNICATION CABINET AND POWER SUPPLY, ON CONCRETE PAD
P	COMMUNICATION PEDESTAL
GEN	GENERATOR SET
	MANHOLE, TYPE AND SIZE AS DENOTED
	HANDHOLE
	SURFACE MOUNTED DUCTS
	RIGID DUCTS, BURIED. MATERIAL SIZE AND TYPE AS DENOTED
	NEW CABLE IN EXISTING DUCTS
	CANOPY LUMINAIRE
T	MEP 600D / 400Y 75kVA TRANSFORMER
LS-#	NEW 10.5m STEEL POLE (OPSD 2415.011) COMPLETE WITH 2 LED FLOODLIGHTS. POLES TO BE MOUNTED ON NEW CONCRETE FOUNDATION OPSD 2200.03.

NOTES:

1. EXTEND FIBRE : BREAK NEW DUCTS INTO EXISTING 300kVA CNP TRANSFORMER BASE.
2. UNDERGROUND DUCTS TURN UP IN BOTTOM OF PULL BOX. SEE SITE PLAN LAYOUT PART 3 FOR CONTINUATION.
3. JOIN EXISTING CONDUIT TO RUN NEW CIRCUIT.
4. EXISTING PBA SKV PLANT FOR REMOVAL NOT SHOWN.
5. DASHED DUCTS HERE SHOW BURIED / EMBEDDED DUCTS COORDINATED WITH BUILDING & WALL CONSTRUCTION.
6. CANOPY PLANT SHOWN ON DETAIL DRAWINGS.
7. EXISTING POLE AND LUMINAIRES TO BE REMOVED AND SALVAGED.
8. INSTAL NEW FOUNDATION AND RE-INSTALL SALVAGED POLE AND LUMINAIRES ON NEW FOUNDATION. POLE TO BE CONNECTED TO EXISTING LIGHTING CIRCUIT.
9. NEW LED LUMINAIRES SHALL BE HUBBLE VIPER FIXTURES CAT. Micro Strike VP-1- 160L-160-5K7- 4F- 120 AND BE MOUNTED ON SIMILAR ARMS TO MATCH EXISTING FLOODLIGHT ON SITE.

5m 0 10m
Scale

IT IS A VIOLATION OF THE LAW FOR ANY PERSON, UNLESS ACTING UNDER THE DIRECT SUPERVISION OF A LICENSED ARCHITECT, TO ALTER THIS DOCUMENT IN ANY WAY. IF AN ITEM BEARING THE SEAL OF AN ARCHITECT OR ENGINEER IS ALTERED, THE ALTERING ARCHITECT OR ENGINEER SHALL AFFIX TO THE ITEM THE SEAL AND SIGNATURE OF THE ALTERING ARCHITECT OR ENGINEER AND THE DATE OF SUCH ALTERATION AND A SPECIFIC DESCRIPTION OF THE ALTERATION.

DISCLAIMER

MARK	DESCRIPTION	DATE	APPR.
A	ISSUED FOR BID (NOT FOR CONST)	03/21/2024	

DESIGNED BY: DOUG MACLEAN
DRAWN BY: K.G.
SUBMITTED BY: WSP CANADA
FILE NAME: \\Drawings\Electrical\Data\2020\20M-00635-00 PARE 3.0
SIZE: ANSI D
PLOTTED BY: N.G.
DATE: 08/15/2023
SOLICITATION NO.:
CONTRACT NO.:
PLOT DATE: 02/16/2024

BUFFALO AND FORT ERIE PUBLIC BRIDGE AUTHORITY

WSP USA Inc.
1600 Liberty Bldg.
Suite 111
Buffalo, NY 14202
(716) 853-1220

CROSSING PATHS BUILDING FUTURES
THE PEACE BRIDGE

BUFFALO AND FORT ERIE PUBLIC BRIDGE AUTHORITY
PROJECT #
PARE 3.0 CANADIAN PLAZA IMPROVEMENTS

SITE PLAN LAYOUT
PART 2

DRAWING NUMBER
E2

S:\Data\2020\20M-00635-00 PARE 3.0\20M-00635-00-N01.dwg Fri, 16 Feb 2024 - 3:44pm GordonN

PLAN VIEW OF WA DUCTING THROUGH WEST ABUTMENT APPROACH SLAB VOID AREA.

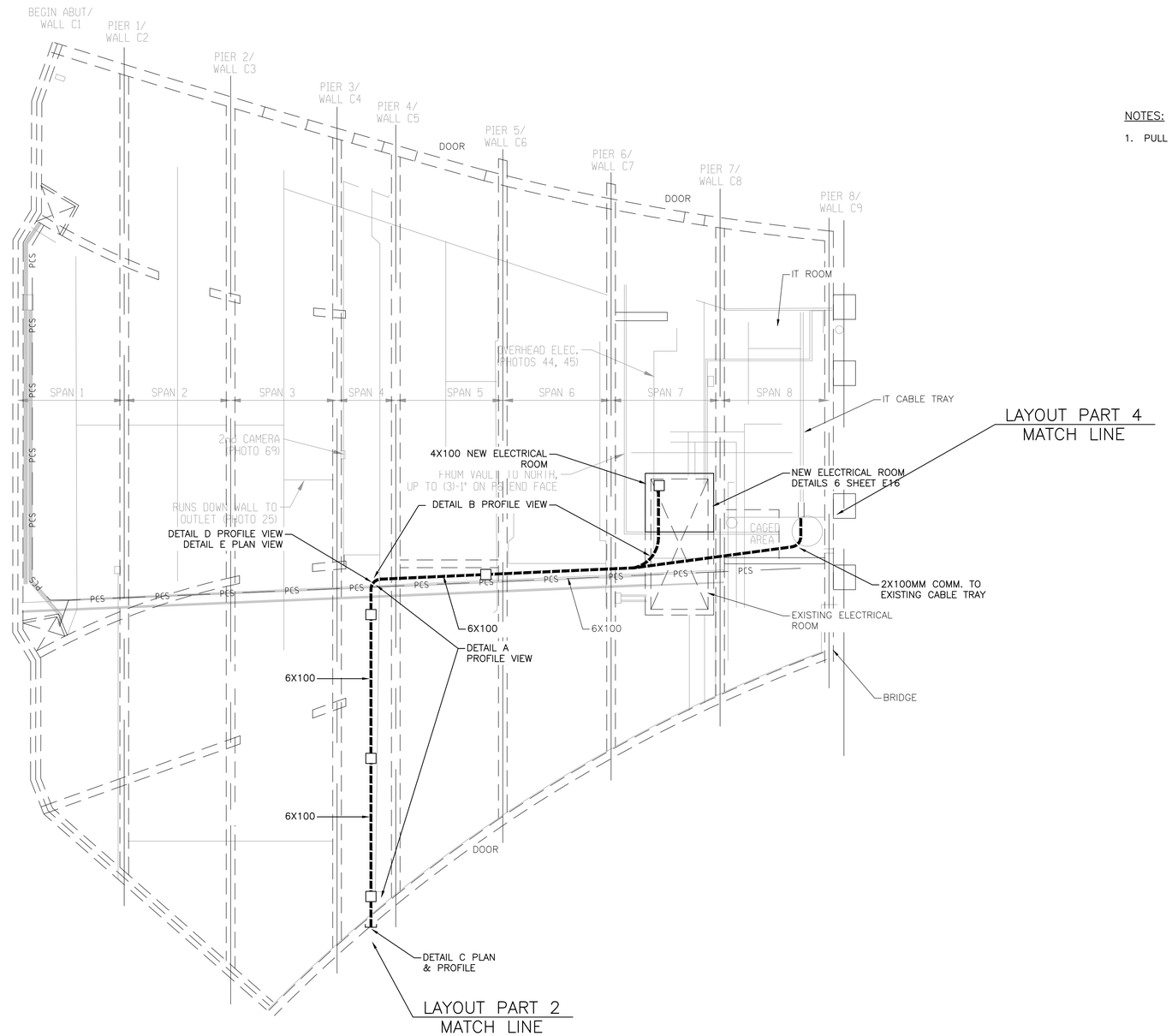

NOTES:

1. PULL BOX SIZE AS DENOTED IN DETAIL 6 SHEET E15.

OVERVIEW OF 6X100 PVC CONDUITS THROUGH ABUTMENT SLAB VOID OF WEST ABUTMENT

N.T.S.

3m 0 6m
Scale

IT IS A VIOLATION OF THE LAW FOR ANY PERSON, UNLESS ACTING UNDER THE DIRECT SUPERVISION OF A LICENSED ARCHITECT OR ENGINEER, TO ALTER AN ITEM IN ANY WAY. IF AN ITEM BEARING THE SEAL OF AN ARCHITECT OR ENGINEER IS ALTERED, THE ALTERING ARCHITECT OR ENGINEER SHALL AFFIX TO THEIR ITEM THE SEAL AND THE NOTATION "ALTERED BY" FOLLOWED BY THEIR SIGNATURE AND THE SPECIFIC DESCRIPTION OF THE ALTERATION AND A SPECIFIC DESCRIPTION OF THE ALTERATION.

MARK	DESCRIPTION	DATE	APPR.
A	ISSUED FOR BID (NOT FOR CONST)	03/01/2024	

DISCLAIMER

DESIGNED BY: MIKE J. WILDE
DWN BY: N.F.G.
CKD BY: M.J.W.
SUBMITTED BY: WSP CANADA
FILE NAME: pw:\\wsp-cans.bentley.com:ca-pw-1\Documents\00224 Buffalo Fort Erie Public Bridge Authority - Bridge\11 WPA\11.5.3 ITMB\AC\Plan\V2020\03-00-N04
PLOTTED BY: N.F.G.
SIZE: 22" X 34"
DATE: 1/29/2024
SOLICITATION NO.:
CONTRACT NO.:
PLOT DATE: 02/16/2024

BUFFALO AND FORT ERIE PUBLIC BRIDGE AUTHORITY

WSP CANADA INC.
401 Bridge Street Drive
Suite 300
Fort Erie, ON, L2A 6M7
(716) 583-1220

CROSSING PATHS ★ BUILDING FUTURES
THE PEACE BRIDGE

BUFFALO AND FORT ERIE PUBLIC BRIDGE AUTHORITY
PROJECT# XXX PARE 3.0

SITE PLAN LAYOUT
PART 3

DRAWING NUMBER
E3

C:\pw_work\wsp-ca18\dms09629\V20M-00635-00-N04.dwg Fri, 16 Feb 2024 - 3:45pm GoradeN

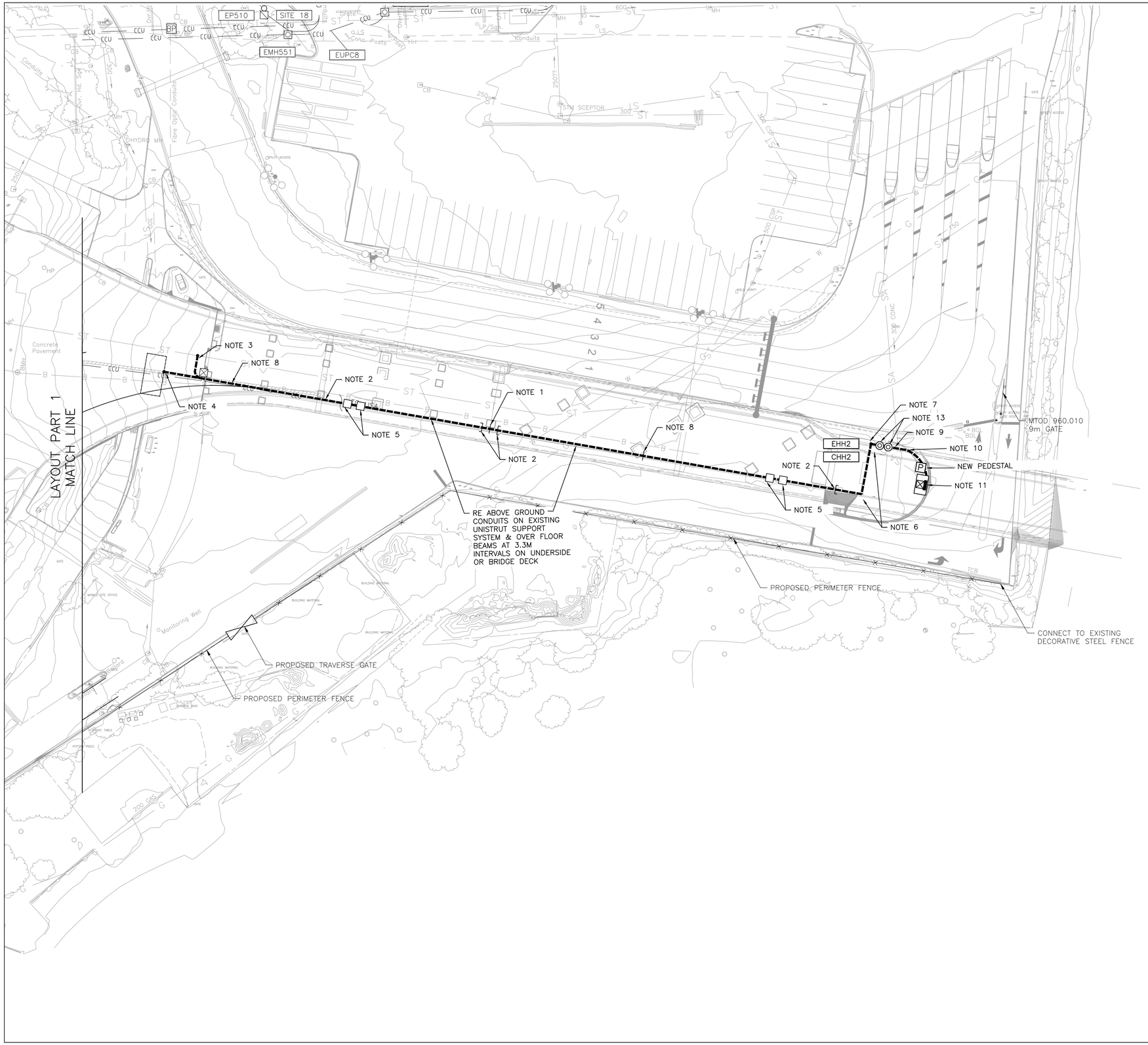

PLAN NORTH

NOTES:

1. FIXED POINT TO ONE SIDE OF BRIDGE EXPANSION JOINT
2. EXPANSION JOINT HAS MAX 150MM RANGE SET INSERTION LENGHT TO SUIT TEMPERATURE VS–30° TO 35°C ENVIRONMENT.
3. 1–50MM TYPE RE COMM. DUCT TURN DOWN TO EXISTING COMMUNICATION CABLE TRAY.
4. 1–50MM TYPE RE POWER DUCT TURN DOWN TO ELECTRICAL ROOM.
5. 300X300X900MM TYPE 316SS PVC BOX BRACED TO FLOOR BEAM WITH GALVANIZED UNISTRUT. ANCHOR CABLES USING KELEMS LACE ON CABLE GRIPS BOLTED TO PULL BOX WALL TO PREVENT CABLES WALKING DUE TO BRIDGE SLOPE & VIBRATION.
6. DUCTS ON NEW HANGERS ABOVE EXISTING UNDER DECK WALKWAY AT 3M INTERVALS.
7. TURN DOWN & UNISTRUT ANCHOR TO VERTICAL STEEL LEG.
8. FIX DUCT AT FLOOR BEAM.
9. FLEXIBLE HYDROTITE FOR 3M AROUND HINGE PIN.
10. BURIED 2X50MM PVC CONDUIT.
11. TYPE 332 CABINET & POWER SUPPLY CABINET ON CONRETE PAD WITH 2X480MM HANDHOLES ADJACENT & GROUNDING SYSTEM.
12. LICENSE PLATE READER CAMERA AND IR ILLUMINATURES ACT YET SHOWN.
13. ELECTRICAL & COMM. HANDWELL 480MM.

IT IS A VIOLATION OF THE LAW FOR ANY PERSON, UNLESS ACTING UNDER THE DIRECT SUPERVISION OF A LICENSED ARCHITECT OR ENGINEER, TO ALTER AN ITEM IN ANY WAY. IF AN ITEM BEARING THE SEAL AND THE NOTATION "ALTERED BY" FOLLOWED BY THEIR ALTERING ARCHITECT OR ENGINEER SHALL AFFIX TO THEIR ITEM THE SEAL AND THE NOTATION "ALTERED BY" FOLLOWED BY THEIR SIGNATURE AND THE SPECIFIC DESCRIPTION OF THE ALTERATION AND A SPECIFIC DESCRIPTION OF THE ALTERATION.

DISCLAIMER

MARK	DESCRIPTION	DATE	APPR.
A	ISSUED FOR BID (NOT FOR CONST)	03/01/2024	

DESIGNED BY: MIKE J. WILDE
DWN BY: N.F.G.
CKD BY: M.J.W.
SUBMITTED BY: WSP CANADA
FILE NAME: C:\pw_wrk\wsp-ca18\dms09629\A20M-00635-00-N03.dwg
Created in WPH v 15.1 TRIGUARD Based on ACADVER:24.0s(LMS Tech)
SIZE: 22" X 34"
PLOTTED BY: N.F.G.
DATE: 1/29/2024
SOLICITATION NO.:
CONTRACT NO.:
PLOTTED DATE: 02/16/2024

BUFFALO AND FORT ERIE PUBLIC BRIDGE AUTHORITY

WSP USA Inc.
421 Ontario Street
Buffalo, N.Y. 14202
Suite 320
(716) 853-1220

BUFFALO AND FORT ERIE PUBLIC
BRIDGE AUTHORITY
PROJECT# XXX PARE 3.0

SITE PLAN LAYOUT
PART 4

CROSSING PATHS ★ BUILDING FUTURES
THE PEACE BRIDGE

DRAWING NUMBER
E4

C:\pw_wrk\wsp-ca18\dms09629\A20M-00635-00-N03.dwg Fri, 16 Feb 2024 - 3:47pm GaroldeN

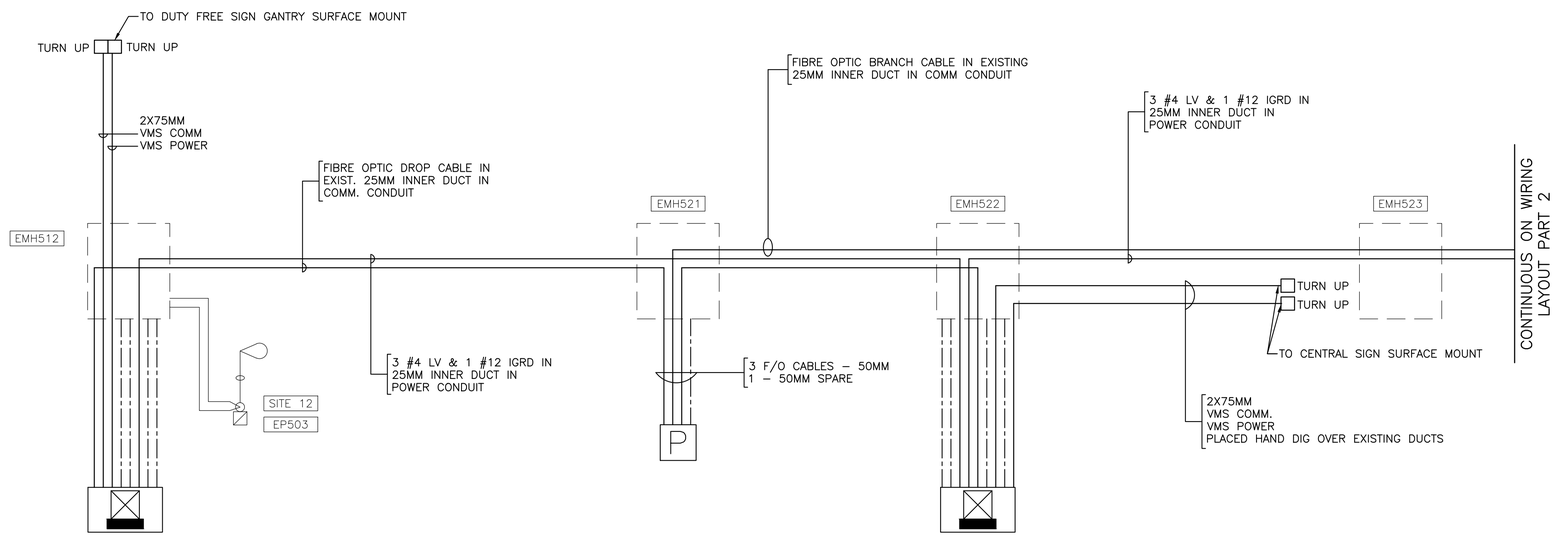

SITE WIRING DIAGRAM PART 1

NOT TO SCALE

IT IS A VIOLATION OF THE LAW FOR ANY PERSON, UNLESS ACTING UNDER THE DIRECT SUPERVISION OF A LICENSED ARCHITECT OR ENGINEER, TO ALTER AN ITEM IN ANY WAY. IF AN ITEM BEARING THE SEAL OF AN ARCHITECT OR ENGINEER IS ALTERED, THE ALTERING ARCHITECT OR ENGINEER SHALL AFFIX TO THEIR ITEM THE SEAL AND THE NOTATION "ALTERED BY" FOLLOWED BY THEIR SIGNATURE AND THE DATE OF SUCH ALTERATION AND A SPECIFIC DESCRIPTION OF THE ALTERATION.

DISCLAIMER

MARK	DESCRIPTION	DATE	APPR.
A	ISSUED FOR BID (NOT FOR CONST)	02/12/2024	

DESIGNED BY: MIKE J. WILDE
DWN BY: N.F.G.
CKD BY: M.J.W.
SUBMITTED BY: WSP CANADA
FILE NAME: pw:\\wsp-ca\ca\projects\buffalo and fort erie public bridge authority\bridge\contract\ca-e-ttb00xxx-000003\Drawings\1.1\ WP4-1.1.5_1TB00JAD-Rev01-A2X00000-00-W01
PLOTTED BY: N.F.G.
PLOT DATE: 02/16/2024
SIZE: 22" X 34"
DATE: 01/XX/2024
SOLICITATION NO.:
CONTRACT NO.:

BUFFALO AND FORT ERIE PUBLIC BRIDGE AUTHORITY

WSP Q2L Inc.
421 Ontario Street
Suite 300
Buffalo, N.Y. 14202
(716) 853-1220

BUFFALO AND FORT ERIE PUBLIC BRIDGE AUTHORITY
PROJECT# XXX PARE 3.0
SITE WIRING LAYOUT
PART 1

CROSSING PATHS ★ BUILDING FUTURES
THE PEACE BRIDGE

DRAWING NUMBER
E5

C:\pw_wrk\wsp-ca18\dms09629\A20M-00635-00-W01.dwg Fri, 16 Feb 2024 - 3:48pm GoraldeN

GENERAL NOTES:

A. DUCTS ARE RIGID PVC UNLESS OTHERWISE LABELLED.

B. DUCTS NOTED RE ARE TYPE RTRC IF DENOTED RE.

NOTES:

1. ADJUST FRAME & COVER TO SUIT NEW ELEVATION.
2. BREAK NEW DUCTS TO EXISTING CHAMBER.
3. SEE OUT–BUILDING DETAIL FOR DUCT TURN UP DETAILS.
4. COMM. RACK FOR CBP SPLICE & PBA SPLICE.

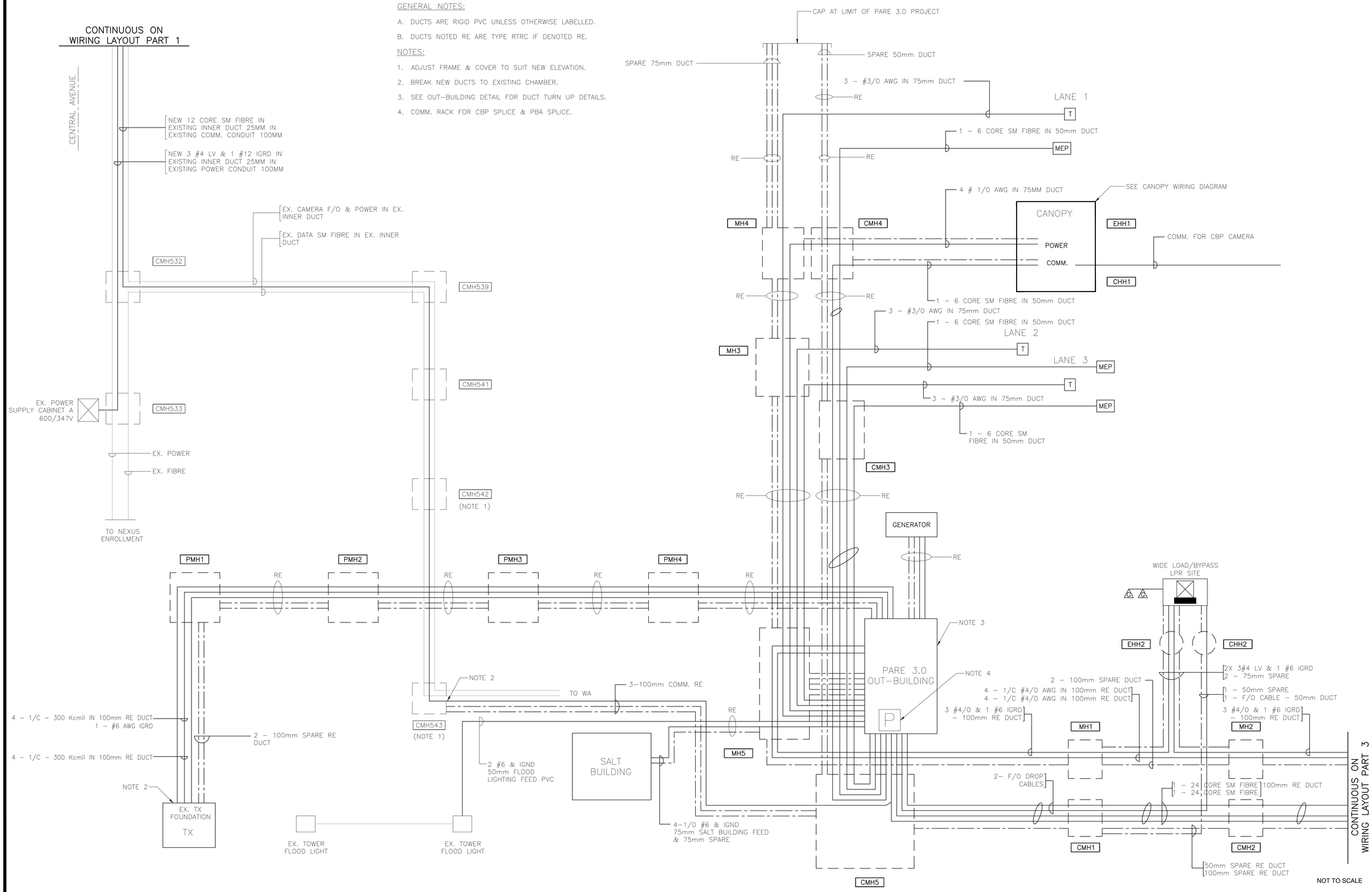

IT IS A VIOLATION OF THE LAW FOR ANY PERSON, UNLESS ACTING UNDER THE DIRECT SUPERVISION OF A LICENSED ARCHITECT OR ENGINEER, TO ALTER AN ITEM IN ANY WAY. IF AN ITEM BEARING THE SEAL OF AN ARCHITECT OR ENGINEER IS ALTERED, THE ALTERING ARCHITECT OR ENGINEER SHALL AFFIX TO THE ITEM THE SEAL AND THEREAFTER SIGN AND DATE THE ALTERATION. FAILURE TO AFFIX THE SEAL AND SIGNATURE AND THE DATE OF SUCH ALTERATION AND A SPECIFIC DESCRIPTION OF THE ALTERATION.

DISCLAIMER

MARK	DESCRIPTION	DATE	APPR.
A	ISSUED FOR BID (NOT FOR CONST)	03/21/2024	

DESIGNED BY: DOUG MACLEAN
DATE: 09/15/2023
DWN BY: K.G.
CKD BY: D.P.M.
SOLICITATION NO.:
SUBMITTED BY: WSP CANADA
CONTRACT NO.:
FILE NAME: \\Stamvgrp\Electrical\data\2020\2046\00635\00-PARE 3.0
SIZE: ANSI D
PLOTTED BY: N.G.
PLOT DATE: 02/16/2024

BUFFALO AND FORT ERIE PUBLIC BRIDGE AUTHORITY

WSP USA Inc.
30 Hazelwood Drive
Suite 111
Amherst, NY 14202
(716) 853-1220

BUFFALO AND FORT ERIE PUBLIC BRIDGE AUTHORITY
PROJECT #
PARE 3.0 CANADIAN PLAZA IMPROVEMENTS

SITE WIRING LAYOUT
PART 2

CROSSING PATHS BUILDING FUTURES THE PEACE BRIDGE

DRAWING NUMBER
E6

S:\data\2020\2046-00635-00 PARE 3.0\2046-00635-00-LW1.dwg Tue, 27 Feb 2024 - 3:28pm GordonN

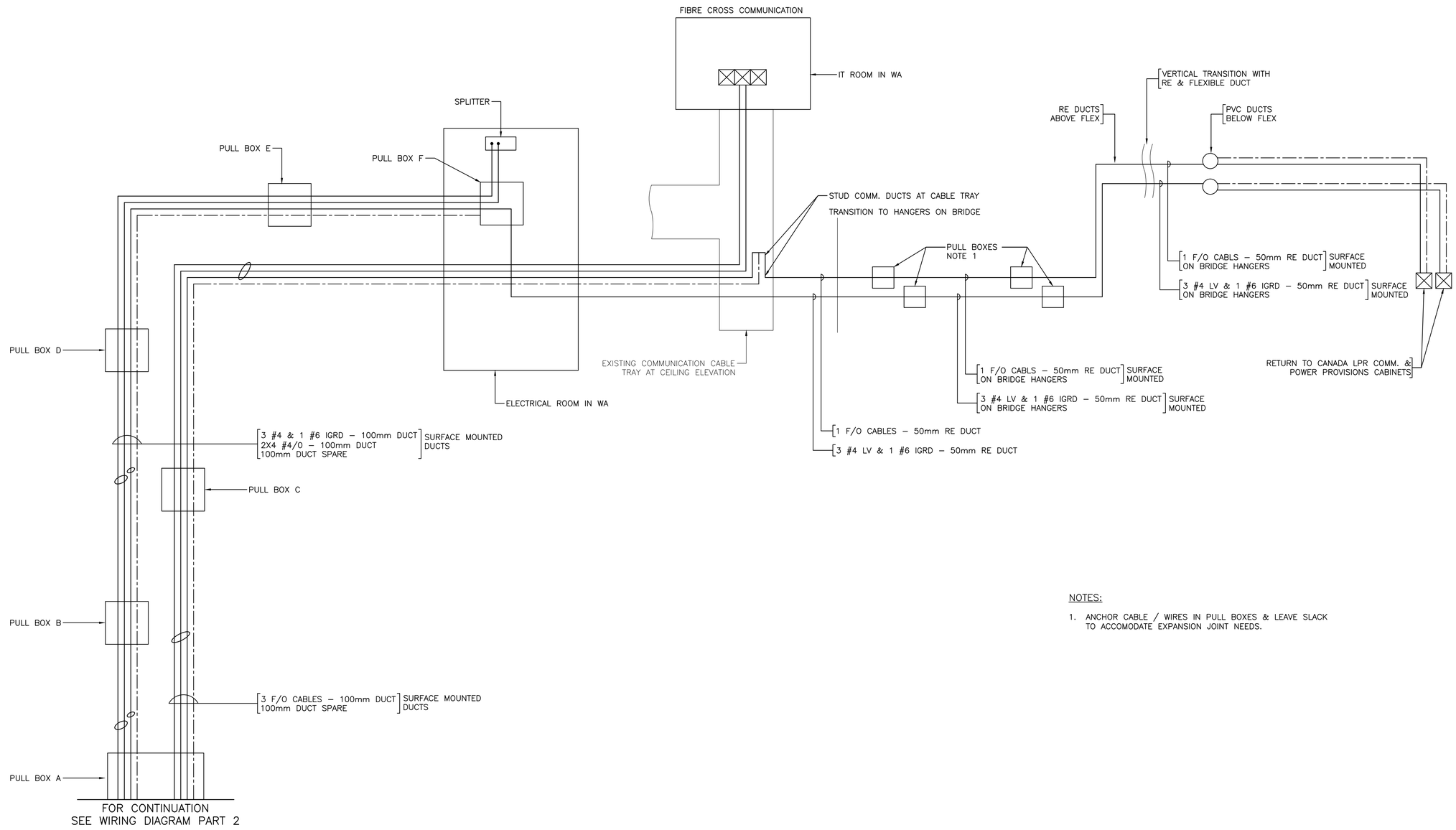

NOTES:

1. ANCHOR CABLE / WIRES IN PULL BOXES & LEAVE SLACK TO ACCOMODATE EXPANSION JOINT NEEDS.

SITE WIRING DIAGRAM PART 3

NOT TO SCALE

IT IS A VIOLATION OF THE LAW FOR ANY PERSON, UNLESS ACTING UNDER THE DIRECT SUPERVISION OF A LICENSED ARCHITECT OR ENGINEER, TO ALTER AN ITEM IN ANY WAY. IF AN ITEM BEARING THE SEAL OF AN ARCHITECT OR ENGINEER IS ALTERED, THE ALTERING ARCHITECT OR ENGINEER SHALL AFFIX TO THEIR ITEM THE SEAL AND THE NOTATION "ALTERED BY" FOLLOWED BY THEIR SIGNATURE AND THE DATE OF SUCH ALTERATION AND A SPECIFIC DESCRIPTION OF THE ALTERATION.

DISCLAIMER

MARK	DESCRIPTION	DATE	APPR.
A	ISSUED FOR BID (NOT FOR CONST)	02/07/2024	

DESIGNED BY: MIKE J. WILDE
DWN BY: N.F.G.
CKD BY: M.J.W.
SUBMITTED BY: WSP CANADA
FILE NAME: pw:\\wsp-ca\ca18\projects\buffalo-and-fort-erie-bridge-authority\bafb-bridge-improvements-2023-24\06-design-phase\00-design-drawings\00635-00-W01.dwg
SIZE: 22" X 34"
PLOTTED BY: N.F.G.
DATE: 02/07/2024
SOLICITATION NO.:
CONTRACT NO.:
PLOTTED DATE: 02/07/2024

BUFFALO AND FORT ERIE PUBLIC BRIDGE AUTHORITY

WSP USA Inc.
40 Lloyd Ave
Suite 320
Buffalo, N.Y. 14202
(716) 853-1220

BUFFALO AND FORT ERIE PUBLIC BRIDGE AUTHORITY
PROJECT# XXX PARE 3.0

SITE WIRING LAYOUT
PART 3

CROSSING PATHS ★ BUILDING FUTURES
THE PEACE BRIDGE

DRAWING NUMBER
E7

C:\pw_wrk\wsp-ca18\pms09629\X20M-00635-00-W01.dwg Wed, 07 Feb 2024 - 9:11am GordsteN

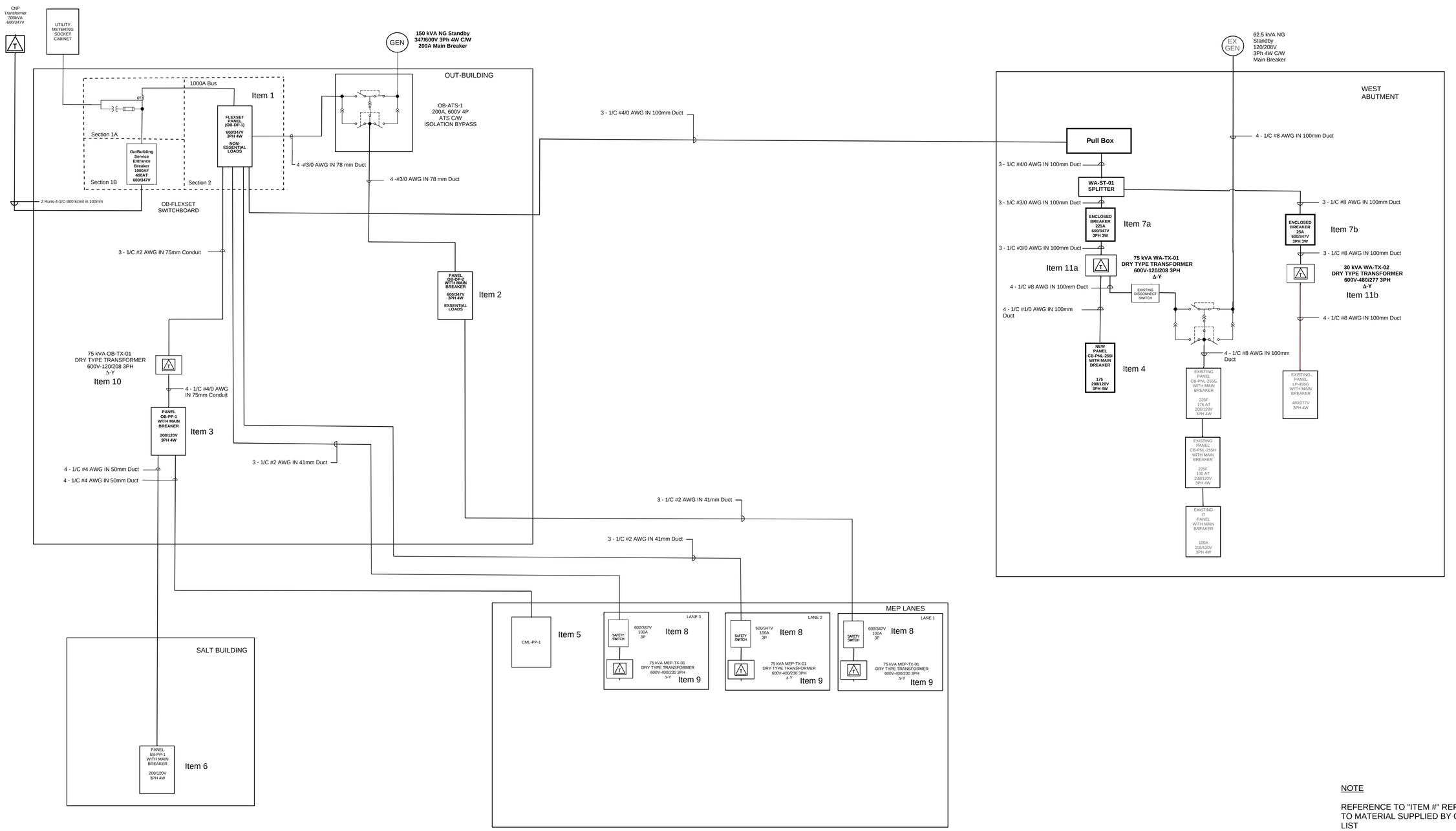

NOTE

REFERENCE TO "ITEM #" REFERS TO MATERIAL SUPPLIED BY OWNER LIST

IT IS A VIOLATION OF THE LAW FOR ANY PERSON, UNLESS THEY ARE ACTING UNDER THE DIRECTION OF A LICENSED ARCHITECT OR ENGINEER, TO ALTER AN ITEM IN ANY WAY. IF AN ITEM BEARING THE SEAL OF AN ARCHITECT OR ENGINEER IS ALTERED, THE ALTERING ARCHITECT OR ENGINEER SHALL AFFIX TO THE ITEM THE SEAL AND THE NOTATION "ALTERED BY" FOLLOWED BY THEIR SIGNATURE AND THE DATE OF SUCH ALTERATION AND A SPECIFIC DESCRIPTION OF THE ALTERATION.

DISCLAIMER

MARK	DESCRIPTION	DATE	APPR.
A	ISSUED FOR BID (NOT FOR CONST)	03/21/2024	

DESIGNED BY: DOUG MACLEAN
DWN BY: K.G.
CKD BY: D.P.M.
SUBMITTED BY: WSP CANADA
DATE: 09/15/2023
SOLICITATION NO.:
CONTRACT NO.:
PLOTTED BY:
PLOT DATE: 09/15/2023
SIZE: ANSI D
FILE NAME:

BUFFALO AND FORT ERIE PUBLIC BRIDGE AUTHORITY

WSP, USA Inc.
50 Lafayette Bvd.
Suite 1100
Buffalo, NY 14202
(716) 853-1220

BUFFALO AND FORT ERIE PUBLIC BRIDGE AUTHORITY
PROJECT #
PARE 3.0 CANADIAN PLAZA IMPROVEMENTS

SINGLE LINE DIAGRAMS

CROSSING PAST 185 ★ BUILDING FUTURES
THE PEACE BRIDGE

SHEET REFERENCE NUMBER
E-8

C:\pw_wrk\wsp-ca18\vms09581\20M-00635-00-001.dwg Fri, 15 Sep 2023 - 5:16pm DanoG

PANEL *PANNEAU*	**OB-FLEXSET**
PHASE-PHASE VOLTAGE *TENSION PHASE-PHASE*	600
PHASE-NEUTRAL VOLTAGE *TENSION PHASE-NEUTRE*	347
MAINS AMPERES *COURANT PRINCIPAL*	1000
MAIN BREAKER *DISJONCTEUR PRINCIPAL*	1000AF-340AT LSIG

PROJECT *PROJET*	PARE 3.0 Non-Essential
BUILDING *BÂTIMENT*	Out-Building
LOCATION EMPLACEMENT	
MOUNTING *MONTAGE*	
Fed From *Alimenté Par*	CNP Transformer

	EQUIPMENT	WIRE SIZE	LOAD VA	Breaker	CCT NO
	Feed to OB-PP-1		16,222	3P-100AT	1
			16,456		
			15,499		
	Feed to Commercial MEP Lane 2		19505	3P-100AT	2
			19505		
			19505		
	Feed to Commercial MEP Lane 3		19505	3P-100AT	3
			19505		
			19505		
250AF-200AT LSI	Feed to West Abutment		26546	3P-200AT	4
			26546		
			26546		
250AF-200AT LSI	Feed to ATS		19505	3P-200AT	5
			19505		
			19505		
	Future Passenger MEP Lane 3			Space	6
	Future Passenger MEP Lane 4			Space	7
	Future Passenger MEP Lane 5			Space	8

PHASE A CONNECTED LOAD	kVA	101.3
PHASE B CONNECTED LOAD	kVA	101.5
PHASE C CONNECTED LOAD	kVA	100.6
TOTAL CONNECTED	kVA	**303**
UTILIZATION FACTOR		1
TOTAL DESIGN	kVA	**303**
PHASE A DESIGN LOAD	kVA	101.3
PHASE B DESIGN LOAD	kVA	101.5
PHASE C DESIGN LOAD	kVA	100.6
Phase A Spare Capacity (0%) Phase A Capacité de Réserve (0%)	kVA	0.0
Phase B Spare Capacity (0%) Phase B Capacité de Réserve (0%)	kVA	0.0
Phase C Spare Capacity (0%) Phase C Capacité de Réserve (0%)	kVA	0.0
PHASE A TOTAL DESIGN LOAD *PHASE A CHARGE DE CALCUL TOTALE*	kVA	101.3
PHASE B TOTAL DESIGN LOAD *PHASE B CHARGE DE CALCUL TOTALE*	kVA	101.5
PHASE C TOTAL DESIGN LOAD *PHASE C CHARGE DE CALCUL TOTALE*	kVA	100.6
TOTAL *TOTAL*	kVA	**303.4**

PHASE AMPS	292
PHASE AMPS	293
PHASE AMPS	290

PHASE AMPS *COURANT PHASE*	292
PHASE AMPS *COURANT PHASE*	293
PHASE AMPS *COURANT PHASE*	290
PANEL AMPS *COURANT PANNEAU*	**292**

18/03/2024

PANEL *PANNEAU*	**OB-PP-1**
PHASE-PHASE VOLTAGE *TENSION PHASE-PHASE*	208
PHASE-NEUTRAL VOLTAGE *TENSION PHASE-NEUTRE*	120
MAINS AMPERES *COURANT PRINCIPAL*	400
MAIN BREAKER *DISJONCTEUR PRINCIPAL*	300

PROJECT *PROJET*	PARE 3.0 Non-Essential
BUILDING *BÂTIMENT*	Out-Building
LOCATION EMPLACEMENT	
MOUNTING *MONTAGE*	Surface
Fed From *Alimenté Par*	OB-PP-1

Cable Group *Groupe de Câble*	EQUIPMENT *ÉQUIPEMENT*	Wire Size *Calibre Câble*	Load Charge VA	Breaker *Disjoncteur*	CCT NO	CCT NO	Breaker *Disjoncteur*	Load Charge VA	Wire Size *Calibre Câble*	EQUIPMENT *ÉQUIPEMENT*	Cable Group *Groupe de Câble*
	Salt Shed Services SB-PP-1		4462	3P-80A	1	2	3P-40A	3000		Generator Block Heater	
			5137		3	4		3000			
			4162		5	6		3000			
	Out-Building Receptacles		1440	1P-15A	7	8		1000		Out-Building Climate	
	Out-Building Receptacles		1440	1P-15A	9	10	3P-15A	1000		Out-Building Climate	
	Out-Building Receptacles		1440	1P-15A	11	12		1000		Out-Building Climate	
				Space	13	14	1P-15A	500		Generator Battery Charger	
	Out-Building Lighting		1000	1P-15A	15	16	Space				
				Space	17	18	Space				
	Site Lighting		500	3P-15A	19	20		6555		Commercial Lanes CML-PP-1	
			500		21	22	3P-80A	5517			
			500		23	24		4965			
				Space	25	26	Space			Future Passenger Lanes PL-PP-1	
				Space	27	28	Space				
				Space	29	30	Space				

PHASE A CONNECTED LOAD *CHARGE CONNECTÉE PHASE A*	kVA	17.5
PHASE B CONNECTED LOAD *CHARGE CONNECTÉE PHASE B*	kVA	17.6
PHASE C CONNECTED LOAD *CHARGE CONNECTÉE PHASE C*	kVA	15.1
TOTAL CONNECTED *TOTAL CONNECTÉE*	kVA	**50**
UTILIZATION FACTOR *FACTEUR d'UTILISATION*		**0.9**
TOTAL DESIGN *CONCEPTION TOTALE*	kVA	**45**
PHASE A DESIGN LOAD *PHASE A CHARGE DE CONCEPTION*	kVA	15.7
PHASE B DESIGN LOAD PHASE B CHARGE DE CONCEPTION	kVA	15.8
PHASE C DESIGN LOAD *PHASE C CHARGE DE CONCEPTION*	kVA	13.6
Phase A Spare Capacity (10%) Phase A Capacité de Réserve (10%)	kVA	1.6
Phase B Spare Capacity (10%) Phase B Capacité de Réserve (10%)	kVA	1.4
Phase C Spare Capacity (10%) Phase C Capacité de Réserve (10%)	kVA	1.6
PHASE A TOTAL DESIGN LOAD *PHASE A CHARGE DE CALCUL TOTALE*	kVA	17
PHASE B TOTAL DESIGN LOAD *PHASE B CHARGE DE CALCUL TOTALE*	kVA	17
PHASE C TOTAL DESIGN LOAD *PHASE C CHARGE DE CALCUL TOTALE*	kVA	15
TOTAL *TOTAL*	kVA	**50**

PHASE AMPS *COURANT PHASE*	131
PHASE AMPS *COURANT PHASE*	132
PHASE AMPS *COURANT PHASE*	113

PHASE AMPS *COURANT PHASE*	144
PHASE AMPS *COURANT PHASE*	143
PHASE AMPS *COURANT PHASE*	126
PANEL AMPS *COURANT PANNEAU*	**138**

PANEL *PANNEAU*	**CML-PP-1**
PHASE-PHASE VOLTAGE *TENSION PHASE-PHASE*	208
PHASE-NEUTRAL VOLTAGE *TENSION PHASE-NEUTRE*	120
MAINS AMPERES *COURANT PRINCIPAL*	125
MAIN BREAKER *DISJONCTEUR PRINCIPAL*	80

PROJECT *PROJET*	PARE 3.0 - Non-Essential
BUILDING *BÂTIMENT*	Commercial MEP Lanes
LOCATION EMPLACEMENT	
MOUNTING *MONTAGE*	Surface
Fed From *Alimenté Par*	OB-PP-1

Cable Group *Groupe de Câble*	EQUIPMENT *ÉQUIPEMENT*	Wire Size *Calibre Câble*	Load Charge VA	Breaker *Disjoncteur*	CCT NO	CCT NO	Breaker *Disjoncteur*	Load Charge VA	Wire Size *Calibre Câble*	EQUIPMENT *ÉQUIPEMENT*	Cable Group *Groupe de Câble*
	VMS L1		1700	1P-20A	1	2	1P-15A	1440		Utility GFCI Receptacle A	
	VMS L2		1700	1P-20A	3	4	1P-15A	1440		Utility GFCI Receptacle B	
	VMS L3		1700	1P-20A	5	6	1P-15A	1440		Utility GFCI Receptacle C	
	CBP Ethernet Camera/Switch		950	1P-15A	7	8	1P-15A	1440		Utility GFCI Receptacle D	
	PBA Ethernet Cameras		150	1P-15A	9	10	1P-15A	1440		Utility GFCI Receptacle E	
	PBA Ethernet Switch		800	1P-25A	11	12	Space				
	Lane 1 - Canopy Lighting		170	1P-15A	13	14	Space				
	Lane 2 - Canopy Lighting		170	1P-15A	15	16	Space				
	Lane 3 - Canopy Lighting		170	1P-15A	17	18	Space				
				Space	19	20	Space				
				Space	21	22	Space				
				Space	23	24	Space				
				Space	25	26	Space				
				Space	27	28	Space				
				Space	29	30	Space				

PHASE A CONNECTED LOAD *CHARGE CONNECTÉE PHASE A*	kVA	5.7
PHASE B CONNECTED LOAD *CHARGE CONNECTÉE PHASE B*	kVA	4.9
PHASE C CONNECTED LOAD *CHARGE CONNECTÉE PHASE C*	kVA	4.1
TOTAL CONNECTED *TOTAL CONNECTÉE*	kVA	**15**
UTILIZATION FACTOR *FACTEUR d'UTILISATION*		**1**
TOTAL DESIGN *CONCEPTION TOTALE*	kVA	**15**
PHASE A DESIGN LOAD *PHASE A CHARGE DE CONCEPTION*	kVA	5.7
PHASE B DESIGN LOAD PHASE B CHARGE DE CONCEPTION	kVA	4.9
PHASE C DESIGN LOAD *PHASE C CHARGE DE CONCEPTION*	kVA	4.1
Phase A Spare Capacity (15%) Phase A Capacité de Réserve (15%)	kVA	0.9
Phase B Spare Capacity (15%) Phase B Capacité de Réserve (15%)	kVA	0.6
Phase C Spare Capacity (15%) Phase C Capacité de Réserve (15%)	kVA	0.9
PHASE A TOTAL DESIGN LOAD *PHASE A CHARGE DE CALCUL TOTALE*	kVA	6.6
PHASE B TOTAL DESIGN LOAD *PHASE B CHARGE DE CALCUL TOTALE*	kVA	5.5
PHASE C TOTAL DESIGN LOAD *PHASE C CHARGE DE CALCUL TOTALE*	kVA	5.0
TOTAL *TOTAL*	kVA	**17**

PHASE AMPS *COURANT PHASE*	47
PHASE AMPS *COURANT PHASE*	41
PHASE AMPS *COURANT PHASE*	34

PHASE AMPS *COURANT PHASE*	55
PHASE AMPS *COURANT PHASE*	46
PHASE AMPS *COURANT PHASE*	41
PANEL AMPS *COURANT PANNEAU*	**47**

PANEL *PANNEAU*	**OB-DP-2**
PHASE-PHASE VOLTAGE *TENSION PHASE-PHASE*	600
PHASE-NEUTRAL VOLTAGE *TENSION PHASE-NEUTRE*	347
MAINS AMPERES *COURANT PRINCIPAL*	225
MAIN BREAKER *DISJONCTEUR PRINCIPAL*	175

PROJECT *PROJET*	PARE 3.0 Essential
BUILDING *BÂTIMENT*	Out-Building
LOCATION EMPLACEMENT	
MOUNTING *MONTAGE*	Switchgear
Fed From *Alimenté Par*	

Cable Group *Groupe de Câble*	EQUIPMENT *ÉQUIPEMENT*	Wire Size *Calibre Câble*	Load Charge VA	Breaker *Disjoncteur*	CCT NO	CCT NO	Breaker *Disjoncteur*	Load Charge VA	Wire Size *Calibre Câble*	EQUIPMENT *ÉQUIPEMENT*	Cable Group *Groupe de Câble*
	Commercial MEP LANE 1		19505	3P-100A	1	2	Space			Future Passenger MEP Lane 1	
			19505		3	4					
			19505		5	6					
				Space	7	8	Space			Future Passenger MEP Lane 2	
				Space	9	10					
				Space	11	12					
				Space	13	14	Space				
				Space	15	16	Space				
				Space	17	18	Space				
				Space	19	20	Space				
				Space	21	22	Space				
				Space	23	24	Space				
				Space	25	26	Space				
				Space	27	28	Space				
				Space	29	30	Space				

PHASE A CONNECTED LOAD *CHARGE CONNECTÉE PHASE A*	kVA	19.5
PHASE B CONNECTED LOAD *CHARGE CONNECTÉE PHASE B*	kVA	19.5
PHASE C CONNECTED LOAD *CHARGE CONNECTÉE PHASE C*	kVA	19.5
TOTAL CONNECTED *TOTAL CONNECTÉE*	kVA	**59**
UTILIZATION FACTOR *FACTEUR d'UTILISATION*		**1**
TOTAL DESIGN *CONCEPTION TOTALE*	kVA	**59**
PHASE A DESIGN LOAD *PHASE A CHARGE DE CONCEPTION*	kVA	19.5
PHASE B DESIGN LOAD PHASE B CHARGE DE CONCEPTION	kVA	19.5
PHASE C DESIGN LOAD *PHASE C CHARGE DE CONCEPTION*	kVA	19.5
Phase A Spare Capacity (15%) Phase A Capacité de Réserve (15%)	kVA	0.0
Phase B Spare Capacity (15%) Phase B Capacité de Réserve (15%)	kVA	0.0
Phase C Spare Capacity (15%) Phase C Capacité de Réserve (15%)	kVA	0.0
PHASE A TOTAL DESIGN LOAD *PHASE A CHARGE DE CALCUL TOTALE*	kVA	19.5
PHASE B TOTAL DESIGN LOAD *PHASE B CHARGE DE CALCUL TOTALE*	kVA	19.5
PHASE C TOTAL DESIGN LOAD *PHASE C CHARGE DE CALCUL TOTALE*	kVA	19.5
TOTAL *TOTAL*	kVA	**59**

PHASE AMPS *COURANT PHASE*	56
PHASE AMPS *COURANT PHASE*	56
PHASE AMPS *COURANT PHASE*	56

PHASE AMPS *COURANT PHASE*	56
PHASE AMPS *COURANT PHASE*	56
PHASE AMPS *COURANT PHASE*	56
PANEL AMPS *COURANT PANNEAU*	**56**

PANEL *PANNEAU*	**CB-PNL-225I**
PHASE-PHASE VOLTAGE *TENSION PHASE-PHASE*	208
PHASE-NEUTRAL VOLTAGE *TENSION PHASE-NEUTRE*	120
MAINS AMPERES COURANT PRINCIPAL	225
MAIN BREAKER *DISJONCTEUR PRINCIPAL*	170

PROJECT *PROJET*	PARE 3.0 - Non-Essential
BUILDING *BÂTIMENT*	Salt Building
LOCATION EMPLACEMENT	
MOUNTING *MONTAGE*	Surface
Fed From *Alimenté Par*	OB-PP-1

Cable Group *Groupe de Câble*	EQUIPMENT *ÉQUIPEMENT*	Wire Size *Calibre Câble*	Load Charge VA	Breaker *Disjoncteur*	CCT NO	CCT NO	Breaker *Disjoncteur*	Load Charge VA	Wire Size *Calibre Câble*	EQUIPMENT *ÉQUIPEMENT*	Cable Group *Groupe de Câble*
	Space				1	2				Space	
	Space				3	4				Space	
	Space				5	6				Space	
	Space				7	8				Space	
				Space	9	10	Space				
				Space	11	12	Space				
				Space	13	14	Space				
				Space	15	16	Space				
				Space	17	18	Space				
				Space	19	20	Space				
				Space	21	22	Space				
				Space	23	24	Space				
				Space	25	26	Space				
				Space	27	28	Space				
				Space	29	30	Space				

PHASE A CONNECTED LOAD *CHARGE CONNECTÉE PHASE A*	kVA	0.0
PHASE B CONNECTED LOAD *CHARGE CONNECTÉE PHASE B*	kVA	0.0
PHASE C CONNECTED LOAD *CHARGE CONNECTÉE PHASE C*	kVA	0.0
TOTAL CONNECTED *TOTAL CONNECTÉE*	kVA	**0**
UTILIZATION FACTOR *FACTEUR d'UTILISATION*		**1**
TOTAL DESIGN *CONCEPTION TOTALE*	kVA	**0**
PHASE A DESIGN LOAD *PHASE A CHARGE DE CONCEPTION*	kVA	0.0
PHASE B DESIGN LOAD PHASE B CHARGE DE CONCEPTION	kVA	0.0
PHASE C DESIGN LOAD *PHASE C CHARGE DE CONCEPTION*	kVA	0.0
Phase A Spare Capacity (0%) Phase A Capacité de Réserve (0%)	kVA	0.0
Phase B Spare Capacity (0%) Phase B Capacité de Réserve (0%)	kVA	0.0
Phase C Spare Capacity (0%) Phase C Capacité de Réserve (0%)	kVA	0.0
PHASE A TOTAL DESIGN LOAD *PHASE A CHARGE DE CALCUL TOTALE*	kVA	0.0
PHASE B TOTAL DESIGN LOAD *PHASE B CHARGE DE CALCUL TOTALE*	kVA	0.0
PHASE C TOTAL DESIGN LOAD *PHASE C CHARGE DE CALCUL TOTALE*	kVA	0.0
TOTAL *TOTAL*	kVA	**0**

PHASE AMPS *COURANT PHASE*	0
PHASE AMPS *COURANT PHASE*	0
PHASE AMPS *COURANT PHASE*	0

PHASE AMPS *COURANT PHASE*	0
PHASE AMPS *COURANT PHASE*	0
PHASE AMPS *COURANT PHASE*	0
PANEL AMPS *COURANT PANNEAU*	**0**

PANEL *PANNEAU*	**SB-PP-1**
PHASE-PHASE VOLTAGE *TENSION PHASE-PHASE*	208
PHASE-NEUTRAL VOLTAGE *TENSION PHASE-NEUTRE*	120
MAINS AMPERES *COURANT PRINCIPAL*	125
MAIN BREAKER *DISJONCTEUR PRINCIPAL*	70

PROJECT *PROJET*	PARE 3.0 - Non-Essential
BUILDING *BÂTIMENT*	Salt Building
LOCATION EMPLACEMENT	
MOUNTING *MONTAGE*	Surface
Fed From *Alimenté Par*	OB-PP-1

Cable Group *Groupe de Câble*	EQUIPMENT *ÉQUIPEMENT*	Wire Size *Calibre Câble*	Load Charge VA	Breaker *Disjoncteur*	CCT NO	CCT NO	Breaker *Disjoncteur*	Load Charge VA	Wire Size *Calibre Câble*	EQUIPMENT *ÉQUIPEMENT*	Cable Group *Groupe de Câble*
	Salt Shed Block Heater Receptacles		1440	1P-15A	1	2	1P-15A	1440		Salt Shed Receptacles	
	Salt Shed Block Heater Receptacles		1440	1P-15A	3	4	1P-15A	1440		Salt Shed Receptacles	
	Salt Shed Block Heater Receptacles		1440	1P-15A	5	6	1P-15A	1440		Salt Shed Receptacles	
	Spare			1P-15A	7	8	1P-15A	1000		Salt Shed Door A	
	Salt Shed Interior Lighting		280	1P-15A	9	10	1P-15A	1440		Heating	
	Salt Shed Interior Lighting		700	1P-25A	11	12	Space				
				Space	13	14	Space				
				Space	15	16	Space				
				Space	17	18	Space				
				Space	19	20	Space				
				Space	21	22	Space				
				Space	23	24	Space				
				Space	25	26	Space				
				Space	27	28	Space				
				Space	29	30	Space				

PHASE A CONNECTED LOAD *CHARGE CONNECTÉE PHASE A*	kVA	3.9
PHASE B CONNECTED LOAD *CHARGE CONNECTÉE PHASE B*	kVA	4.6
PHASE C CONNECTED LOAD *CHARGE CONNECTÉE PHASE C*	kVA	3.6
TOTAL CONNECTED *TOTAL CONNECTÉE*	kVA	**12**
UTILIZATION FACTOR *FACTEUR d'UTILISATION*		**1**
TOTAL DESIGN *CONCEPTION TOTALE*	kVA	**12**
PHASE A DESIGN LOAD *PHASE A CHARGE DE CONCEPTION*	kVA	3.9
PHASE B DESIGN LOAD PHASE B CHARGE DE CONCEPTION	kVA	4.6
PHASE C DESIGN LOAD *PHASE C CHARGE DE CONCEPTION*	kVA	3.6
Phase A Spare Capacity (15%) Phase A Capacité de Réserve (15%)	kVA	0.6
Phase B Spare Capacity (15%) Phase B Capacité de Réserve (15%)	kVA	0.5
Phase C Spare Capacity (15%) Phase C Capacité de Réserve (15%)	kVA	0.6
PHASE A TOTAL DESIGN LOAD *PHASE A CHARGE DE CALCUL TOTALE*	kVA	4.5
PHASE B TOTAL DESIGN LOAD *PHASE B CHARGE DE CALCUL TOTALE*	kVA	5.1
PHASE C TOTAL DESIGN LOAD *PHASE C CHARGE DE CALCUL TOTALE*	kVA	4.2
TOTAL *TOTAL*	kVA	**14**

PHASE AMPS *COURANT PHASE*	32
PHASE AMPS *COURANT PHASE*	38
PHASE AMPS *COURANT PHASE*	30

PHASE AMPS *COURANT PHASE*	37
PHASE AMPS *COURANT PHASE*	43
PHASE AMPS *COURANT PHASE*	35
PANEL AMPS *COURANT PANNEAU*	**38**

IT IS A VIOLATION OF THE LAW FOR ANY PERSON, UNLESS THEY ARE ACTING UNDER THE DIRECTION OF A LICENSED ARCHITECT OR ENGINEER, TO ALTER AN ITEM IN ANY WAY. IF AN ITEM BEARING THE SEAL OF AN ARCHITECT OR ENGINEER IS ALTERED, THE ALTERING ARCHITECT OR ENGINEER SHALL AFFIX TO THE ITEM THE SEAL AND THE NOTATION "ALTERED BY" FOLLOWED BY THEIR SIGNATURE AND THE DATE OF SUCH ALTERATION AND A SPECIFIC DESCRIPTION OF THE ALTERATION.

DISCLAIMER

MARK	DESCRIPTION	DATE	APPR.
A	ISSUED FOR BID (NOT FOR CONST)	03/21/2024	

DESIGNED BY: DOUG MACLEAN
DWN BY: K.G.
CKD BY: D.P.M.
SUBMITTED BY: WSP CANADA
DATE: 09/15/2023
SOLICITATION NO.:
CONTRACT NO.:
PLOT DATE: 09/15/2023
PLOTTED BY:
SIZE: ANSI D

BUFFALO AND FORT ERIE PUBLIC BRIDGE AUTHORITY

WSP Gh Inc
307 Delaware Ave
Buffalo, NY 14202
(716) 853-1220

BUFFALO AND FORT ERIE PUBLIC BRIDGE AUTHORITY
PROJECT #
PARE 3.0 CANADIAN PLAZA IMPROVEMENTS

PANEL BOARD SCHEDULES

CROSSING PATHS. BUILDING FUTURES. THE PEACE BRIDGE

SHEET REFERENCE NUMBER
E-9

C:\pw_work\wsp-ca18\dmd39581\20M-00635--00-001.dwg Fri, 15 Sep 2023 - 5:16pm DennG

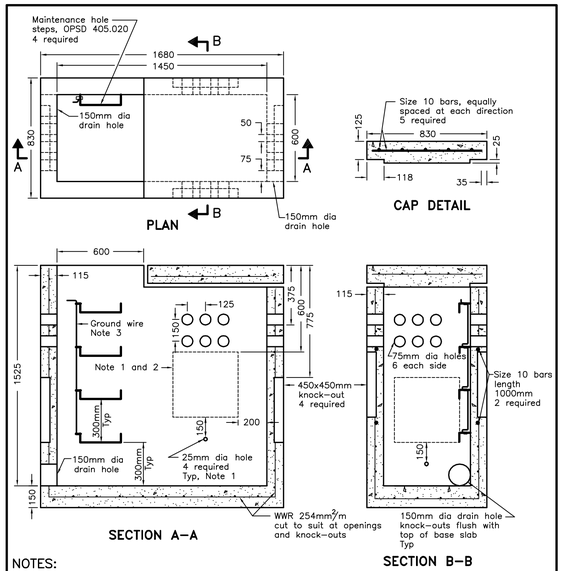

NOTES:

1 For general installation details see OPSD 2117.01.
2 For duct installation profiles see OPSD 2103.02.
3 1/0 AWG stranded copper bare wire shall be fastened to steps using aluminum parallel groove clamps and anti-oxidant component.
A Minimum cover for reinforcing steel shall be 35mm external surface, 25mm internal surface.
B All reinforcing bars shall be cut to suit openings.
C All dimensions are in millimetres unless otherwise shown.

ONTARIO PROVINCIAL STANDARD DRAWING	Nov 2015	Rev 1
ELECTRICAL MAINTENANCE HOLE PRECAST CONCRETE 600 x 1450mm		OPSD 2111.020

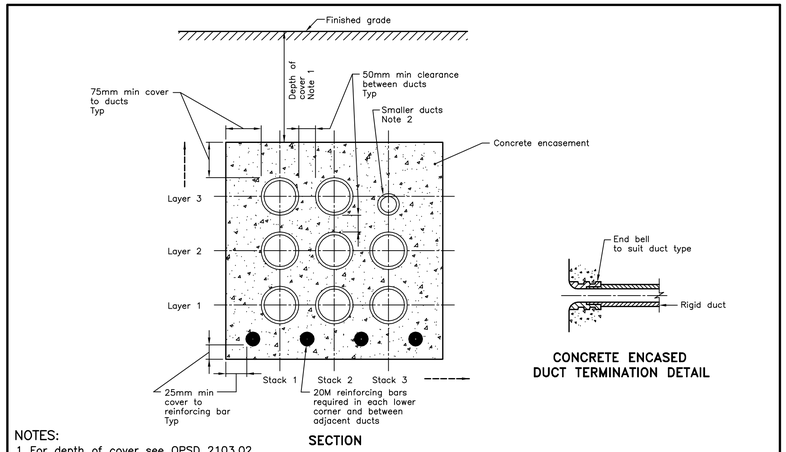

NOTES:

1 For depth of cover see OPSD 2103.02.
2 Smaller ducts shall be installed in uppermost layers.
A Maximum number of layers shall be 4, maximum number of stacks shall be 4.
B All dimensions are in millimetres unless otherwise shown.

ONTARIO PROVINCIAL STANDARD DRAWING	Nov 2015	Rev 2
RIGID DUCTS ENCASED IN CONCRETE		OPSD 2100.06

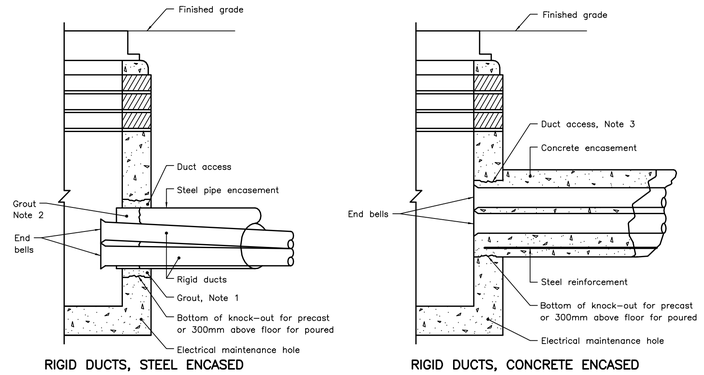

NOTES:

1 Grout shall be placed full depth and flush with both walls.
2 Grout shall be placed within steel pipe, around all ducts, to a minimum depth of 75mm.
3 Concrete shall be placed flush with inside wall.
A All dimensions are in millimetres unless otherwise shown.

ONTARIO PROVINCIAL STANDARD DRAWING	Nov 2013	Rev 1
ELECTRICAL MAINTENANCE HOLES ENTRY OF ENCASED DUCTS		OPSD 2123.02

NOTES:

1 #6 AWG stranded copper bare wire shall be fastened to steps using single cable to pipe copper ground connectors. The ground connector shall be a copper or copper–alloy saddle. The connector shall be attached to each step in such a way that the ground wire runs perpendicularly to the steps.
2 When specified, a precast concrete cap shall be used to replace the frame with cover and adjustment units.
3 Space surrounding ducts in used openings shall be filled with grout.
4 For maintenance holes with metal frames, ground wire shall be attached to frame using a ground lug suitable for #6 AWG stranded copper wire.
5 For maintenance holes with metal covers and non–metallic frames or maintenance holes with metal covers not bolted to the metal frame, the ground wire shall be attached to the maintenance hole cover using a ground lug suitable for #6 AWG flat braided copper wire with 1m of slack above finished grade.
A This OPSD shows general equipment only. Refer to other drawings for particular applications.
B Orient maintenance hole such that the wall with maintenance hole steps is nearest to the travelled roadway, where practical. Orient maintenance hole to accommodate existing ducts both in line and grade. Maintain a maximum 45° skew to existing ducts in line. Where required, cut back duct encasement to 3.0m maximum beyond the maintenance hole and refit duct to proper location.
C Unused openings shall be filled with grout.
D All dimensions are in millimetres unless otherwise shown.

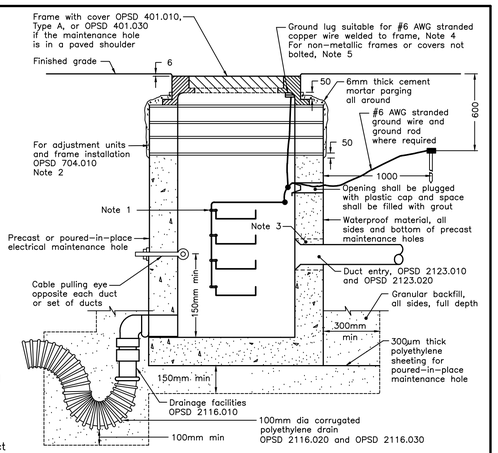

ONTARIO PROVINCIAL STANDARD DRAWING	Nov 2017	Rev 0
ELECTRICAL MAINTENANCE HOLES GENERAL INSTALLATION REQUIREMENTS		OPSD 2117.010

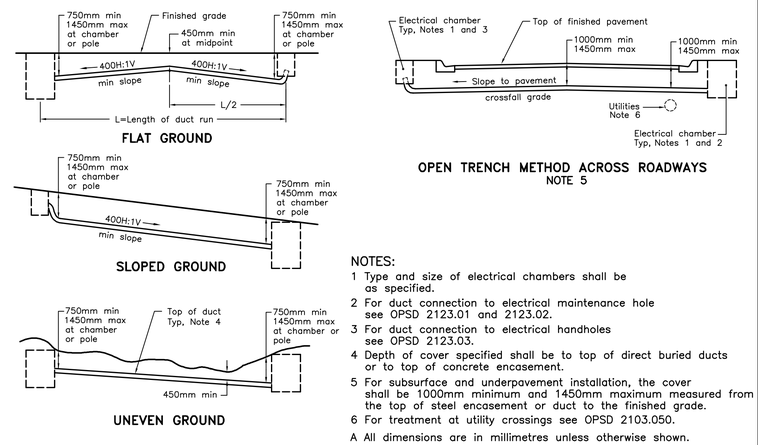

NOTES:

1 Type and size of electrical chambers shall be as specified.
2 For duct connection to electrical maintenance hole see OPSD 2123.01 and 2123.02.
3 For duct connection to electrical handholes see OPSD 2123.03.
4 Depth of cover specified shall be to top of direct buried ducts or to top of concrete encasement.
5 For subsurface and underpavement installation, the cover shall be 1000mm minimum and 1450mm maximum measured from the top of steel encasement or duct to the finished grade.
6 For treatment at utility crossings see OPSD 2103.050.
A All dimensions are in millimetres unless otherwise shown.

ONTARIO PROVINCIAL STANDARD DRAWING	Nov 2015	Rev 1
DUCT INSTALLATION PROFILES		OPSD 2103.02

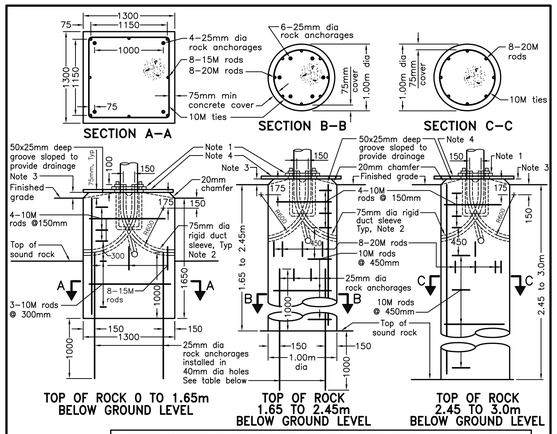

POLE LENGTH m	NORMAL BURIAL DEPTH IN EARTH m	BELOW GROUND DEPTH TO TOP OF ROCK, m									
		0.0	0.30	0.60	0.90	1.20	1.50	1.80	2.10	2.40	2.70
		DEPTH OF ROCK EXCAVATION REQUIRED, m									
7.0	2.15	1.65*	1.35*	1.05*	0.75*	0.45*	0.15*	* Rock anchorages not required			
7.5	2.15	1.65*	1.35*	1.05*	0.75*	0.45*	0.15*				
8.7	2.45	1.65*	1.35*	1.05*	0.75*	0.45*	0.15*				
9.0	2.45	1.65*	1.35*	1.05*	0.75*	0.45	0.15*				
10.5	2.60	1.65*	1.35	1.05	0.75	0.45	0.15*	0*			
12.0	2.75	1.65*	1.35	1.05	0.75	0.45	0.15	0*			
13.6	2.90	1.65	1.35	1.05	0.75	0.45	0.15	0	0*		
15.1	3.05	1.65	1.35	1.05	0.75	0.45	0.15	0	0	0*	0*

NOTES:

1 For anchorage assembly see OPSD 2215.02. For pole mounting details see OPSD 2215.03.
2 Minimum of two sleeves required for concrete foundation. Three sleeves as specified.
3 Top of footing shall be installed at 40mm ±15mm above finished grade in paved or concrete areas and 75mm ±25mm above finished grade in earth or granular areas.
4 Plywood template set level. Remove to finish concrete after initial set.
A All dimensions are in millimetres unless otherwise shown.

ONTARIO PROVINCIAL STANDARD DRAWING	Nov 2012	Rev 2
CONCRETE FOUNDATION FOR BASE MOUNTED LIGHTING POLES WHERE ROCK IS ENCOUNTERED		OPSD 2200.03

IT IS A VIOLATION OF THE LAW FOR ANY PERSON, UNLESS ACTING UNDER THE DIRECTION OF A LICENSED ARCHITECT OR ENGINEER, TO ALTER AN ITEM IN ANY WAY. IF AN ITEM BEARING THE SEAL OF AN ARCHITECT OR ENGINEER IS ALTERED, THE ALTERING ARCHITECT OR ENGINEER SHALL AFFIX TO THE ITEM THE SEAL AND THE NOTATION 'ALTERED BY' FOLLOWED BY THEIR SIGNATURE AND THE DATE OF SUCH ALTERATION AND A SPECIFIC DESCRIPTION OF THE ALTERATION.

MARK	DESCRIPTION	DATE	APPR.
A	ISSUED FOR BID (NOT FOR CONST)	03/21/2024	

DISCLAIMER

DESIGNED BY: DOUG MACLEAN
CKD BY: D.P.M.
DWN BY: K.G.
SUBMITTED BY: WSP CANADA
FILE NAME:
SIZE: ANSI D
DATE: 09/15/2023
SOLICITATION NO.:
CONTRACT NO.:
PLOTTED BY:
PLOT DATE: 09/15/2023

BUFFALO AND FORT ERIE PUBLIC BRIDGE AUTHORITY

WSP Canada Inc.
100 Commerce Blvd.
Buffalo, NY 14202
(716) 853-1220

CROSSING PATHS. BUILDING FUTURES. TWO STATE REMEDY.

BUFFALO AND FORT ERIE PUBLIC BRIDGE AUTHORITY
PROJECT # PARE 3.0 CANADIAN PLAZA IMPROVEMENTS

ELECTRICAL DETAILS 1

SHEET REFERENCE NUMBER
E-10

C:\pw_wsp\wsp-ca18\dms09581\20M-00635-00-001.dwg Fri, 15 Sep 2023 – 5:16pm DanG

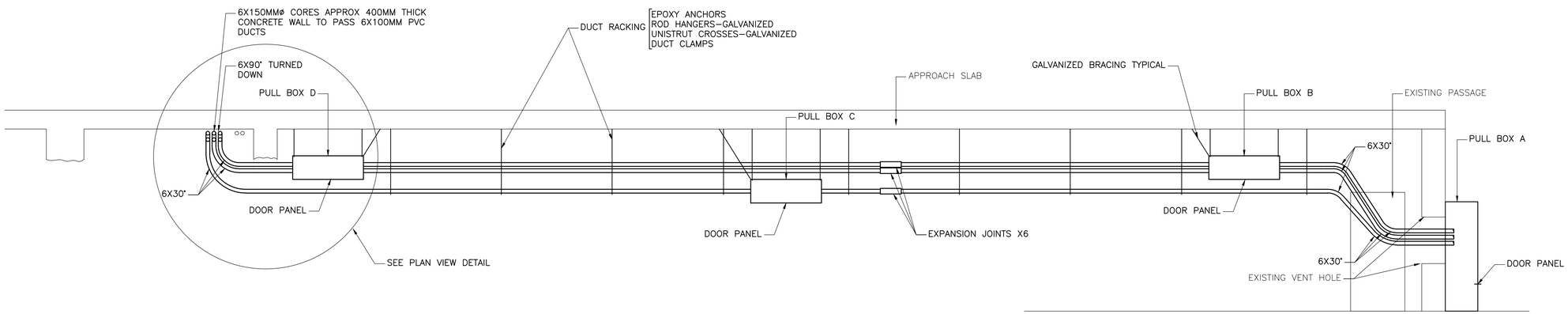

DETAIL A
VIEW IN PROFILE IN OLD PEDESTRIAN TUNNEL
LOOKING TOWARDS BRIDGE AT WALL C5

N.T.S.

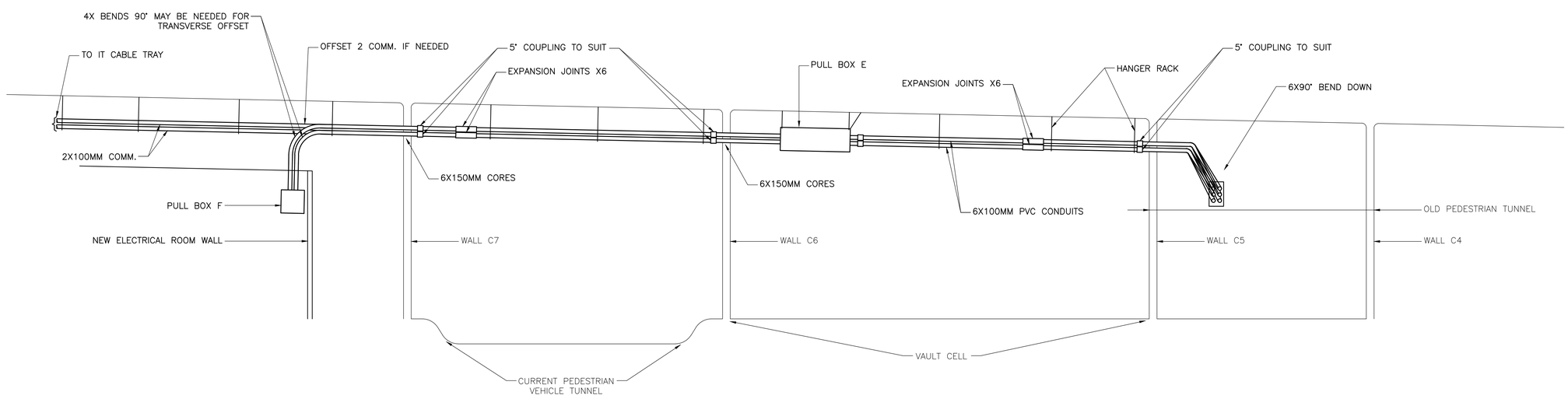

DETAIL B
VIEW IN PROFILE FROM OLD PEDESTRIAN TUNNEL
TO NEW ELECTRICAL ROOM

N.T.S.

NOT TO SCALE

MARK	DESCRIPTION	DATE	APPR.
A	ISSUED FOR BID (NOT FOR CONST)	02/07/2024	

IT IS A VIOLATION OF THE LAW FOR ANY PERSON, UNLESS ACTING UNDER THE DIRECT SUPERVISION OF A LICENSED ARCHITECT OR ENGINEER, TO ALTER AN ITEM IN ANY WAY. IF AN ITEM BEARING THE SEAL OF AN ARCHITECT OR ENGINEER IS ALTERED, THE ALTERING ARCHITECT OR ENGINEER SHALL AFFIX TO THEIR ITEM THE SEAL AND THE NOTATION "ALTERED BY" FOLLOWED BY THEIR SIGNATURE AND THE DATE OF SUCH ALTERATION AND A SPECIFIC DESCRIPTION OF THE ALTERATION.

DISCLAIMER

DESIGNED BY: MIKE J. WILDE
DATE: 02/07/2024
DWN BY: N.F.G
CKD BY: M.J.W.
SOLICITATION NO.:
SUBMITTED BY: WSP CANADA
CONTRACT NO.:
FILE NAME: pw:\\wsp-ca\ca-buildings-transportation-ie-f\Documents\00035 Buffalo and Fort Erie Public Bridge Authority - Rehabilitation\00035-00-001 Design & E Work 1.5.1.1\WSC\00035-00-001 Electrical Details.dwg
BUFFALO AND FORT ERIE PUBLIC BRIDGE AUTHORITY
SIZE: 22" X 34"
PLOTTED BY: N.F.G.
PLOT DATE: 02/07/2024

WSP USA Inc.
40 Lloyd Ave. Drive
Suite 320
Buffalo, N.Y. 14202
(716) 853-1220

BUFFALO AND FORT ERIE PUBLIC BRIDGE AUTHORITY
PROJECT# XXX PARE 3.0
ELECTRICAL DETAILS-2

CROSSING PATHS ★ BUILDING FUTURES
THE PEACE BRIDGE

DRAWING NUMBER
E11

C:\pw_wrk\wsp-ca18\gms09629\X20M-00635-00-001.dwg Wed, 07 Feb 2024 - 9:14am GaroldeN

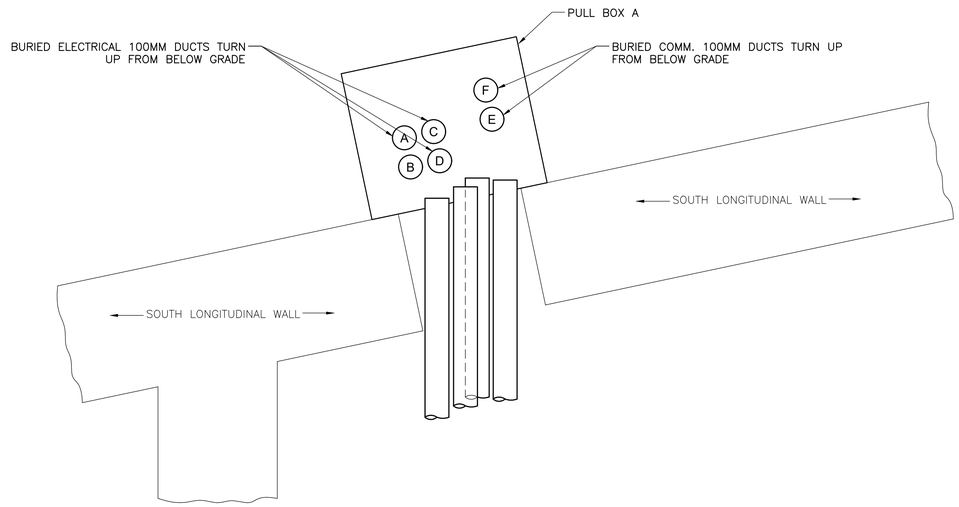

DETAIL C
PLAN VIEW DETAIL AT WALL
N.T.S.

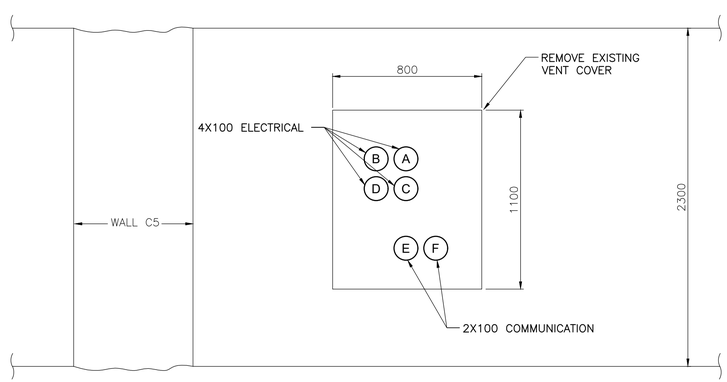

DETAIL C
LOOKING SOUTH AT OLD PED TUNNEL EXTERIOR WALL FROM INSIDE STRUCTURE
PROFILE DETAIL THROUGH EXISTING VENT
N.T.S.

NOT TO SCALE

IT IS A VIOLATION OF THE LAW FOR ANY PERSON, UNLESS ACTING UNDER THE DIRECT SUPERVISION OF A LICENSED ARCHITECT OR ENGINEER, TO ALTER AN ITEM IN ANY WAY. IF AN ITEM BEARING THE SEAL OF AN ARCHITECT OR ENGINEER IS ALTERED, THE ALTERING ARCHITECT OR ENGINEER SHALL AFFIX TO THEIR ITEM THE SEAL AND THE NOTATION 'ALTERED BY' FOLLOWED BY THEIR SIGNATURE AND THE SPECIFIC DESCRIPTION OF THE ALTERATION. ISSUING THE SEAL AND THE NOTATION 'ALTERED BY' FOLLOWED BY THEIR SIGNATURE AND THE SPECIFIC DESCRIPTION OF THE ALTERATION AND A SPECIFIC DESCRIPTION OF THE ALTERATION.

DISCLAIMER

MARK	DESCRIPTION	DATE	APPR.
A	ISSUED FOR BID (NOT FOR CONST)	02/07/2024	

DESIGNED BY: MIKE J. WILDE
DATE: 02/07/2024
DWN BY: N.F.G.
CKD BY: M.J.W.
SOLICITATION NO.:
SUBMITTED BY: WSP CANADA
CONTRACT NO.:
FILE NAME: pw:\\wsp-cans.bentley.com:pw-us-pw-1\Documents\200 Buffalo and Fort Erie Public Bridge Authority - Bridge 3_TRANSCAD\Project\04\05\05\05\001
SIZE: 22" X 34"
PLOTTED BY: N.F.G.
PLOT DATE: 02/07/2024

BUFFALO AND FORT ERIE PUBLIC BRIDGE AUTHORITY

WSP USA Inc.
40 Lloyd Ave
Suite 300, N.Y. 14202
(716) 853-1220

BUFFALO AND FORT ERIE PUBLIC
BRIDGE AUTHORITY
PROJECT# XXX PARE 3.0
ELECTRICAL DETAILS-3

CROSSING PATHS ★ BUILDING FUTURES
THE PEACE BRIDGE

DRAWING NUMBER
E12

C:\pw_work\wsp-ca18\dms09629\A20M-00635-00-001.dwg Wed, 07 Feb 2024 - 9:16am GarofalaN

TYPICAL CORING DETAIL

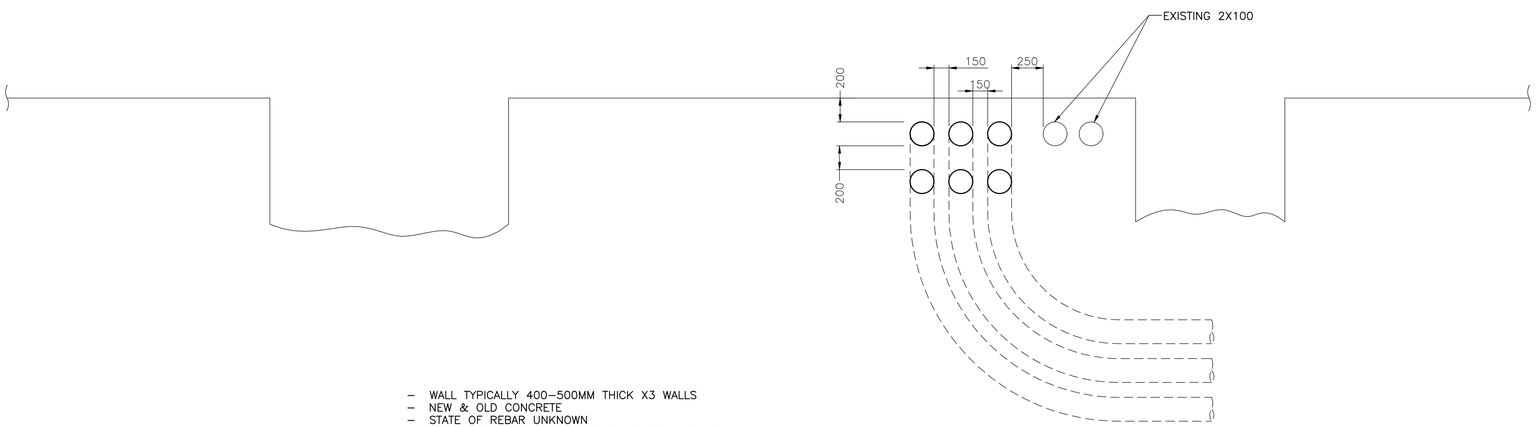

- WALL TYPICALLY 400–500MM THICK X3 WALLS
- NEW & OLD CONCRETE
- STATE OF REBAR UNKNOWN
- LOCAL 50MM SHIFT TO AVOID REBAR IS ALLOWED

DETAIL D
LOOKING TOWARDS BRIDGE AT WALL C5

N.T.S.

NOT TO SCALE

IT IS A VIOLATION OF THE LAW FOR ANY PERSON, UNLESS ACTING UNDER THE DIRECT SUPERVISION OF A LICENSED ARCHITECT OR ENGINEER, TO ALTER AN ITEM IN ANY WAY. IF AN ITEM BEARING THE SEAL OF AN ARCHITECT OR ENGINEER IS ALTERED, THE ALTERING ARCHITECT OR ENGINEER SHALL AFFIX TO THEIR ITEM THE SEAL AND THE NOTATION "ALTERED BY" FOLLOWED BY THEIR SIGNATURE AND THE SPECIFIC DESCRIPTION OF THE ALTERATION.

MARK	DESCRIPTION	DATE	APPR.
A	ISSUED FOR BID (NOT FOR CONST)	03/21/2024	

DISCLAIMER

DESIGNED BY: MIKE J. WILDE
DATE: 02/07/2024
DWN BY: N.F.G.
CKD BY: M.J.W.
SOLICITATION NO.:
SUBMITTED BY: WSP CANADA
CONTRACT NO.:
FILE NAME: pw:wsp-ca-ibe-live01.bentley.com:wsp-ca-ibe-live01-pw-ca-01\Bloomington\00035060\Project Wise\{A0D6F000-0C6C-4A1C-B2C1-0C0A0A0A0A0A}\Drawings\Design\E13.dwg
Designed in V8XM v 15.0, 1 Model(s)/Sheet(s)/Xref(s)
SIZE: 22" X 34"
PLOTTED BY: N.F.G.
PLOT DATE: 02/07/2024

BUFFALO AND FORT ERIE PUBLIC BRIDGE AUTHORITY

WSP USA Inc.
421 Ludlow Drive
Suite 320
Buffalo, N.Y. 14202
(716) 853-1220

BUFFALO AND FORT ERIE PUBLIC BRIDGE AUTHORITY
PROJECT# XXX PARE 3.0

ELECTRICAL DETAILS-4

CROSSING PATHS ★ BUILDING FUTURES
THE PEACE BRIDGE

DRAWING NUMBER
E13

C:\pw_wrk\wsp-ca18\dms09629\A20M-00635-00-001.dwg Wed, 07 Feb 2024 - 9:17am GoroldeN

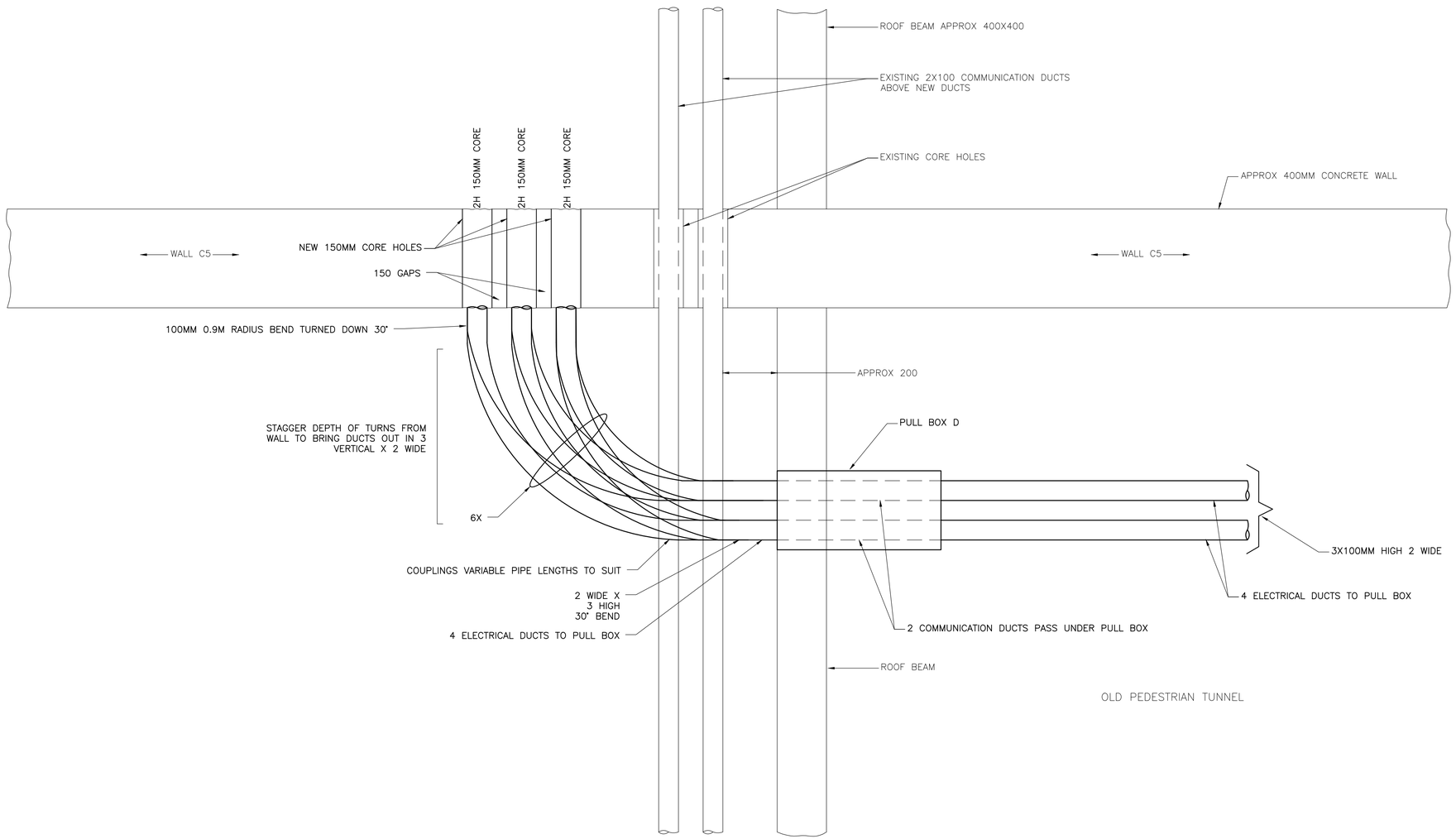

DETAIL E
PLAN VIEW DETAIL
N.T.S.

NOT TO SCALE

IT IS A VIOLATION OF THE LAW FOR ANY PERSON, UNLESS ACTING UNDER THE DIRECT SUPERVISION OF A LICENSED ARCHITECT OR ENGINEER, TO ALTER AN ITEM IN ANY WAY. IF AN ITEM BEARING THE SEAL OF AN ARCHITECT OR ENGINEER IS ALTERED, THE ALTERING ARCHITECT OR ENGINEER SHALL AFFIX TO THEIR ITEM THE SEAL AND THE NOTATION "ALTERED BY" FOLLOWED BY THEIR SIGNATURE AND THE DATE OF SUCH ALTERATION AND A SPECIFIC DESCRIPTION OF THE ALTERATION.

DISCLAIMER

MARK	DESCRIPTION	DATE	APPR.
A	ISSUED FOR BID (NOT FOR CONST)	02/07/2024	

DESIGNED BY: MIKE J. WILDE
DATE: 02/07/2024
DWN BY: N.F.G
CKD BY: M.J.W.
SOLICITATION NO.:
SUBMITTED BY: WSP CANADA
CONTRACT NO.:
FILE NAME: pw:wsp-ca-eng.wsp-pro.com:ca-pw-ENGDOMAIN0001:{9ccc4ccc-0d0f-ccc0-0000-000000000001}/Drawings 1:1 (ISO)/ 1:1 5_1 TRIBECA CROSSING DWG/05E02-001.dwg
PLOTTED BY: N.F.G.
PLOT DATE: 02/07/2024
SIZE: 22" X 34"

BUFFALO AND FORT ERIE PUBLIC BRIDGE AUTHORITY

WSP USA Inc.
467 Ellicott Street
Suite 300
Buffalo, NY, 14202
(716) 853-1220

BUFFALO AND FORT ERIE PUBLIC BRIDGE AUTHORITY
PROJECT# XXX PARE 3.0
ELECTRICAL DETAILS-5

CROSSING PATHS ★ BUILDING FUTURES
THE PEACE BRIDGE

DRAWING NUMBER
E14

C:\pw_work\wsp-ca18\dms09629\A20M-00635-00-001.dwg Wed, 07 Feb 2024 - 9:20am GarofalaN

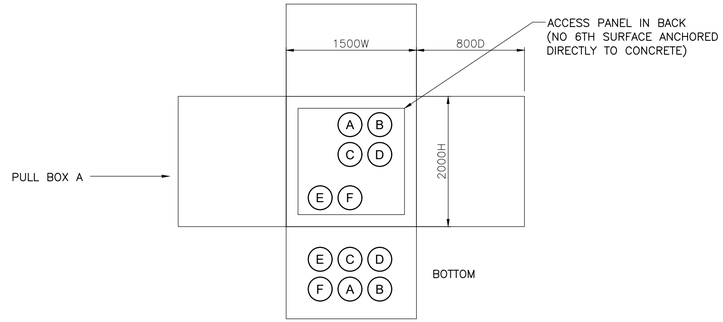

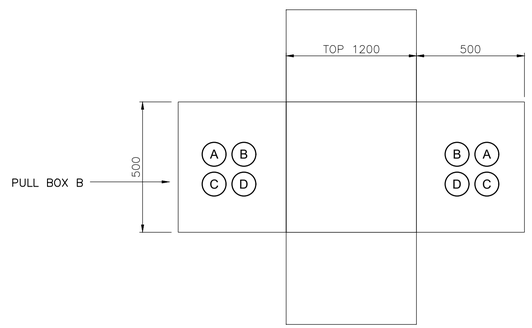

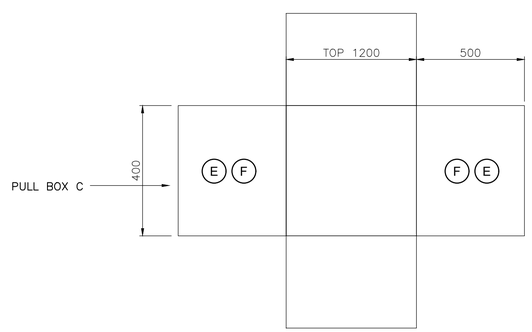

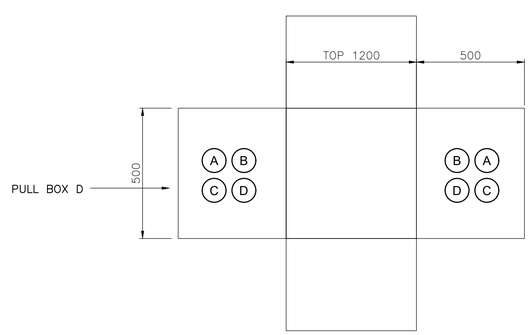

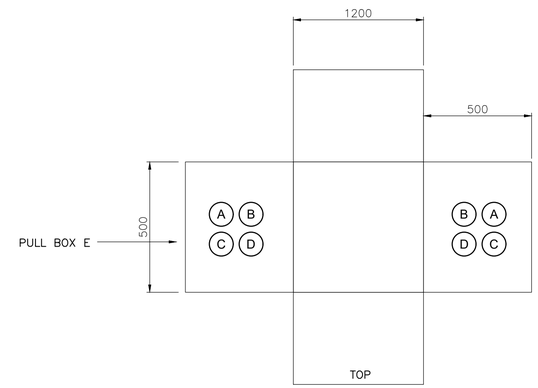

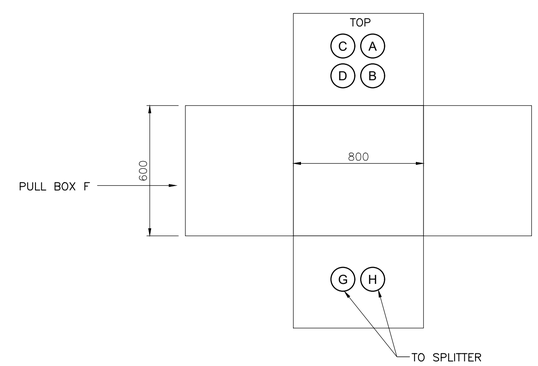

NOTES:

1. BENDING / WELDING / DOOR ATTACHMENT SUPPORT BRACING NOT SHOWN.

DETAIL F

STAINLESS STEEL 316 FULL BOX DETAIL FACING WEST ABUTMENT VOID SPACE

N.T.S.

NOT TO SCALE

IT IS A VIOLATION OF THE LAW FOR ANY PERSON, UNLESS ACTING UNDER THE DIRECT SUPERVISION OF A LICENSED ARCHITECT OR ENGINEER, TO ALTER AN ITEM IN ANY WAY. IF AN ITEM BEARING THE SEAL OF AN ARCHITECT OR ENGINEER IS ALTERED, THE ALTERING ARCHITECT OR ENGINEER SHALL AFFIX TO THEIR ITEM THE SEAL AND THE NOTATION "ALTERED BY" FOLLOWED BY THEIR SIGNATURE AND THE DATE OF SUCH ALTERATION AND A SPECIFIC DESCRIPTION OF THE ALTERATION.

MARK	DESCRIPTION	DATE	APPR.
A	ISSUED FOR BID (NOT FOR CONST)	03/01/2024	

DISCLAIMER

DESIGNED BY: MIKE J. WILDE
DATE: 02/07/2024
DWN BY: N.F.G
CKD BY: M.J.W.
SOLICITATION NO.:
SUBMITTED BY: WSP CANADA
CONTRACT NO.:
FILE NAME: pw:wsp-ca-prod-pw1.bentley.com:wsp-ca-prod-pw1-01\Documents\2020 Projects\Buffalo and Fort Erie Public Bridge Authority\70106635\Design\11 Drawings\11.5 Electrical\02-Drawings\02-Details\70106635-00-001.dwg
PLOTTED BY: N.F.G.
PLOTTED ON: 02/07/2024
SIZE: 22" X 34"

BUFFALO AND FORT ERIE PUBLIC BRIDGE AUTHORITY

WSP USA Inc.
467 Ellicott Street
Suite 300, Ste. 1
Buffalo, NY 14202
(716) 853-1220

BUFFALO AND FORT ERIE PUBLIC
BRIDGE AUTHORITY
PROJECT# XXX PARE 3.0
ELECTRICAL DETAILS-6

CROSSING PATHS ★ BUILDING FUTURES
THE PEACE BRIDGE

DRAWING NUMBER
E15

C:\pw_work\wsp-ca18\dms09629\A20M-00635-00-001.dwg Wed, 07 Feb 2024 - 1:58pm GorodetsN

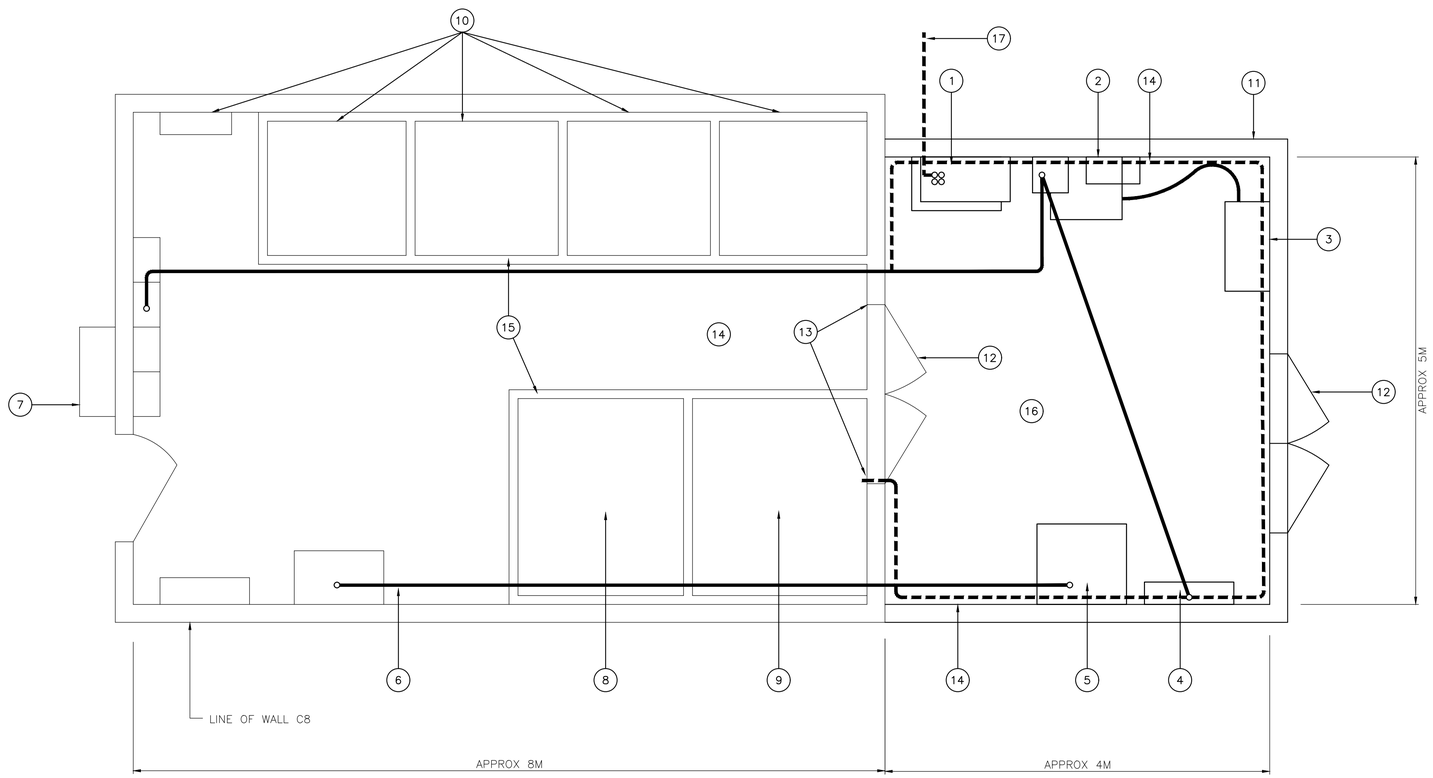

NOTES:

1. NEW PULL BOX F, AT CEILING ELEVATION, WA–ST–01 NEW SPLITTER UNDER PULL BOX AT 2M ELEVATION, WA–TX–01 45kVA TRANSFORMER ON FLOOR.
2. 225A 600/347 ENCLOSED CIRCUIT BREAKER AT 1.5M ELEVATION, WA–ST–02 UNDER CIRCUIT BREAKER.
3. NEW WAPP1 POWER PANEL BOARD.
4. 225A 600V ENCLOSED BREAKER AT 1.5M ELEVATION.
5. WA–TX–02 75kVA TRANSFORMER ON FLOOR.
6. REMOVE EXISTING CONTACTOR FROM EXISTING 480V FEED ON MAKING NEW SUPPLY CONNECTIONS. EXTEND EXISTING CONDUIT TO EXISTING PANEL BOARD WITH NEW EMT CONDUIT. INSTALL NEW 480V FEED FROM NEW ELECTRICAL ROOM EQUIPMENT.
7. LOCK TRANSFER SWITCH TO RUN ON GENERATOR, THEN REMOVE EXISTING 208V SUPPLY TO TRANSFER SWITCH FEED ISOLATION SWITCH. INSTALL NEW 208V FEED FROM NEW ELECTRICAL ROOM EQUIPMENT, THEN REANABLE TRANSFER SWITCH RAW POWER SUPPLY.
8. DEENERGIZE AND LOCK OUT EXISTING SUPPLY CIRCUIT, DISCONNECT LINE SIDE CONDUCTORS, REMOVE LOAD SIDE CONDUCTORS AND CONDUIT WORKS, REMOVE TRANSFORMER.
9. DEENERGIZE AND LOCK OUT EXISTING SUPPLY CIRCUIT, DISCONNECT LINE SIDE CONDUCTORS, REMOVE LOAD SIDE CONDUCTORS AND CONDUIT WORKS, REMOVE TRANSFORMER.
10. ON COMPLETION OF NEW SUPPLIES AT 208V AND 480V, DEENERGIZE AND LOCK OUT 4800V SUPPLY SWITCH AT MATHER ARCH SUPPLY BUILDING, REMOVE ALL 5kV METAL CLAD SWITCH GEAR FROM THIS VAULT, REMOVE ALL SUPPLY ARMOURED 5kV CABLING LEADING BACK TO ELECTRICAL VAULT, REMOVE ALL SUPPLY ARMOURED 5kV CABLING ELECTRICAL VAULT LEADING BACK TO MATHER ARCH.
11. DEMOLISH INTERIOR OF EXISTING STORAGE ROOMS AND MODIFY BLOCK WORK TO MAKE ROOM APPROXIMATELY 4M DEEP X5M WIDE. INSTALL NEW DRIP PROOF CEILING AS MAY BE REQUIRED TO REPLACE EXISTING ROOFING.
12. CONSTRUCT DOUBLE 0.9M WIDE STEEL DOORS WITH HARDWARE TO KEY OPEN ONE DOOR.
13. ISOLATE EXISTING DUPLEX RECEPTACLE SUPPLY CONDUCTORS AND REMOVE WIRING TO ALLOW EMBEDDED CONDUIT TO BE SEVERED. REMOVE EXISTING RECEPTACLES DE–ENERGIZED BY THIS CONDUIT REMOVAL. CUT EXISTING COPPER GROUNDING BUS BAR. CUT BLOCK TO ALLOW DOUBLE DOOR TO BE INSTALLED.
14. INSTALL NEW COPPER GROUNDING BUS BAR THROUGH EITHER SIDE OF DOOR FRAME GAP. INSTALL NEW COPPER GROUNDING BUS BAR THROUGH WALL AND ENTRY DOOR TO NEW ELECTRICAL ROOM.
15. DEMOLISH LEVELING PAD AND RE–FINISH CONCRETE FLOOR TO REMOVE THIS TRIPPING HAZARD.
16. INSTALL NEW UTILITY LIGHTING AND 2 UTILITY RECEPTACLES IN NEW ELECTRICAL ROOM. INSTALL NEW UTILITY RECEPTACLES IN EXISTING ELECTRICAL ROOM IF NEW DOOR TO ANY EX RECEPTACLES OUT OF SERVICE.
17. APPROXIMATE ENETRY LOCATION FOR NEW SUPPLY DUCTS TO ENTER TOP OF NEW PULL BOX F. EXISTING COMMUNICATIONS DUCTS ABOUT 3.5M OVER EXISTING AREA NOT SHOWN FOR CLARITY IN THIS PLAN VIEW.

NEW AND EXISTING ELECTRICAL ROOM WEST ABUTMENT PLAN VIEW

N.T.S.

NOT TO SCALE

IT IS A VIOLATION OF THE LAW FOR ANY PERSON, UNLESS ACTING UNDER THE DIRECT SUPERVISION OF A LICENSED ARCHITECT OR ENGINEER, TO ALTER AN ITEM IN ANY WAY. IF AN ITEM BEARING THE SEAL OF AN ARCHITECT OR ENGINEER IS ALTERED, THE ALTERING ARCHITECT OR ENGINEER SHALL AFFIX TO THEIR ITEM THE SEAL AND THE NOTATION "ALTERED BY" FOLLOWED BY THEIR SIGNATURE AND THE DATE OF SUCH ALTERATION AND A SPECIFIC DESCRIPTION OF THE ALTERATION.

DISCLAIMER

MARK	DESCRIPTION	DATE	APPR.
A	ISSUED FOR BID (NOT FOR CONST)	02/07/2024	

DESIGNED BY: MIKE J. WILDE
DWN BY: N.F.G
CKD BY: M.J.W.
SUBMITTED BY: WSP CANADA
FILE NAME: pw:wsp-ca-ibm.bentley.com:ca-ps-pw-01\Documents\00635 - BUFFALO AND FORT ERIE PUBLIC BRIDGE AUTHORITY\00635-00-001\Drawings\Layouts\E16 - WA ELECTRICAL LAYOUT.dwg
SIZE: 22" X 34"
PLOTTED BY: N.F.G.
DATE: 02/07/2024
SOLICITATION NO.:
CONTRACT NO.:
PLOT DATE: 02/07/2024

BUFFALO AND FORT ERIE PUBLIC BRIDGE AUTHORITY

WSP USA Inc.
2 Delaware Drive
Suite 300
Buffalo, N.Y. 14202
(716) 853-1220

BUFFALO AND FORT ERIE PUBLIC BRIDGE AUTHORITY
PROJECT# XXX PARE 3.0
WA ELECTRICAL LAYOUT

CROSSING PATHS ★ BUILDING FUTURES
THE PEACE BRIDGE

DRAWING NUMBER
E16

C:\pw_wrk\wsp-ca18\dms09629\A20M-00635-00-001.dwg Wed, 07 Feb 2024 - 9:23am GeraldeN

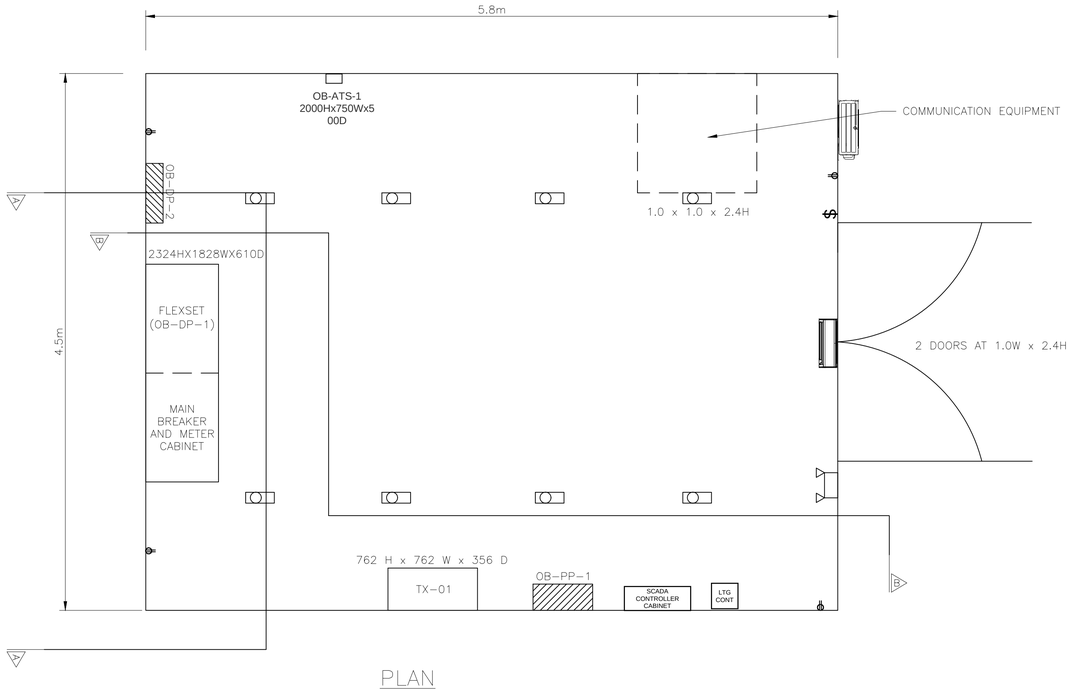

PLAN

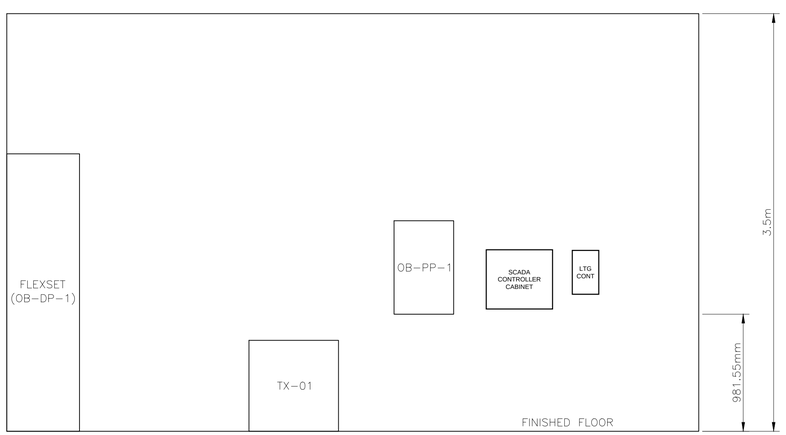

ELEVATION B–B

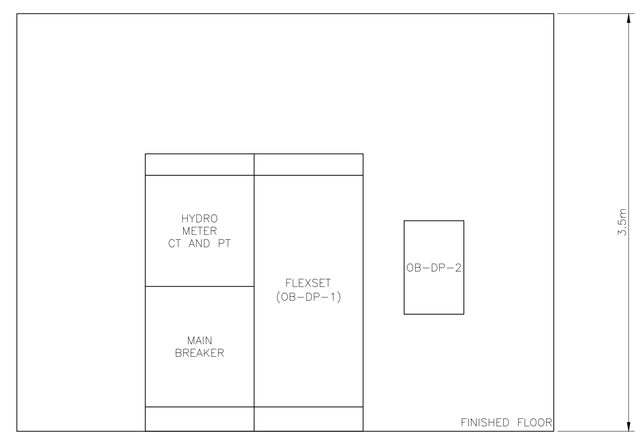

ELEVATION A–A

LEGEND

- PANELBOARD
- EMERGENCY BATTERY PACK LIGHT FIXTURE UNILINE H–7260
- DUPLEX RECEPTACLE
- $ LIGHTING SWITCH
- LED WRAP LIGHT–4,000 LUMENS LITHONIA H–6433
- 12000 BTU DUCTLESS HEAT PUMP MINI SPLIT SYSTEM WITH INDOOR AND OUTDOOR UNIT MITSUBISHI OR EQUAL

NOTES:

1. COORDINATE INSTALLATION ALL ELECTRICAL EQUIPMENT WITH THE PREFAB OUT–BUILDING MANUFACTURER.
2. ALL CONSTRUCTION SHALL BE IN CONFORMANCE WITH CSA C22.1, CANADIAN ELECTRICAL CODE, PART 1, SAFETY STANDARDS FOR ELECTRICAL INSTALLATIONS INCLUDING AND ESA AMENDMENTS.
3. CONTRACTOR TO INSTALL 3 COPPER CLAD GROUND RODS THERMIT WELDED TO SOFT–DRAWN TIN–PLATED COPPER #4/0 AWG BARE GROUND WIRE TO CREATE A 3m TRIAD GROUND GRID AT THE SIDE OF THE BUILDING THIS GROUND GRID SHALL BE EXTEND WITH #4/0 INSULATED GROUND WIRE VIA AN UNDERGROUND PVC SLEEVE TO BUILDING GROUND BUS.
4. CONTRACTOR SHALL INSTALL A COPPER GROUND BUS CONSISTING COMPLETE AROUND THE PERIMETER OF THE ROOM. IT SHALL RISE OVER THE DOOR OPENING. THE BUS SHALL BE 50mm x 6 mm THICK AND COMPLETE WITH INSULATED SUPPORTS, FASTENINGS, CONNECTORS AS REQUIRED. EXCEPT AT THE DOOR THE GROUND BUS SHALL BE INSTALLED 200 MM ABOVE FLOOR SLAB.
5. CONTRACTOR TO INSTALL NEW 12000 BTU DUCTLESS HEAT PUMP MINI SPLIT UNITS AS INDICATED.
6. PBA WILL PROVIDE A ALLEN-BRADLEY SCADA MODULE FOR INSTALLATION BY CONTRACTOR. THIS MODULE WILL INTERFACE WITH PBA LIGHTING NETWORK LOCATED IN COMMUNICATION RACK. THE MODULE WILL THEN PROVIDE CONTROL THE 30A-3P LIGHTING CONTACTOR WHICH PROVIDES POWER TO SITE LIGHTING POLES.

0.25m 0 0.5m
Scale

IT IS A VIOLATION OF THE LAW FOR ANY PERSON, UNLESS ACTING UNDER THE DIRECT SUPERVISION OF A LICENSED ARCHITECT OR ENGINEER, TO ALTER IN ANY WAY AN ITEM IN ANY WAY. IF AN ITEM BEARING THE SEAL OF AN ARCHITECT OR ENGINEER IS ALTERED, THE ALTERING ARCHITECT OR ENGINEER SHALL AFFIX TO THE ITEM THE SEAL AND SIGNATURE AND THE DATE OF SUCH ALTERATION AND A SPECIFIC DESCRIPTION OF THE ALTERATION.

DISCLAIMER

MARK	DESCRIPTION	DATE	APPR.
A	ISSUED FOR BID (NOT FOR CONST)	03/21/2024	

DESIGNED BY: DOUG MCLEAN
DWN BY: K.G.
CKD BY: D.P.M.
SUBMITTED BY: WSP CANADA
FILE NAME: I:\Drawings\Electrical\data\2020\20M-00635-00 PARE 3.0
DATE: 09/15/2023
SOLICITATION NO.:
CONTRACT NO.:
PLOT DATE: 02/07/2024
SIZE: ANSI D
PLOTTED BY: N.G.

BUFFALO AND FORT ERIE PUBLIC BRIDGE AUTHORITY

WSP USA Inc.
50 Sheppard Ave. East,
Suite 111
Toronto, M2N 6K9
(416) 653-1220

BUFFALO AND FORT ERIE PUBLIC BRIDGE AUTHORITY
PROJECT #
PARE 3.0 CANADIAN PLAZA IMPROVEMENTS

OUT-BUILDING LAYOUT

CROSSING PATHS ★ BUILDING FUTURES
THE PEACE BRIDGE

DRAWING NUMBER
E17

I:\Drawings\Electrical\data\2020\20M-00635-00 PARE 3.0\20M-00635-00-Out-Building Layout.dwg Fri, 01 Mar 2024 - 9:55am GMK

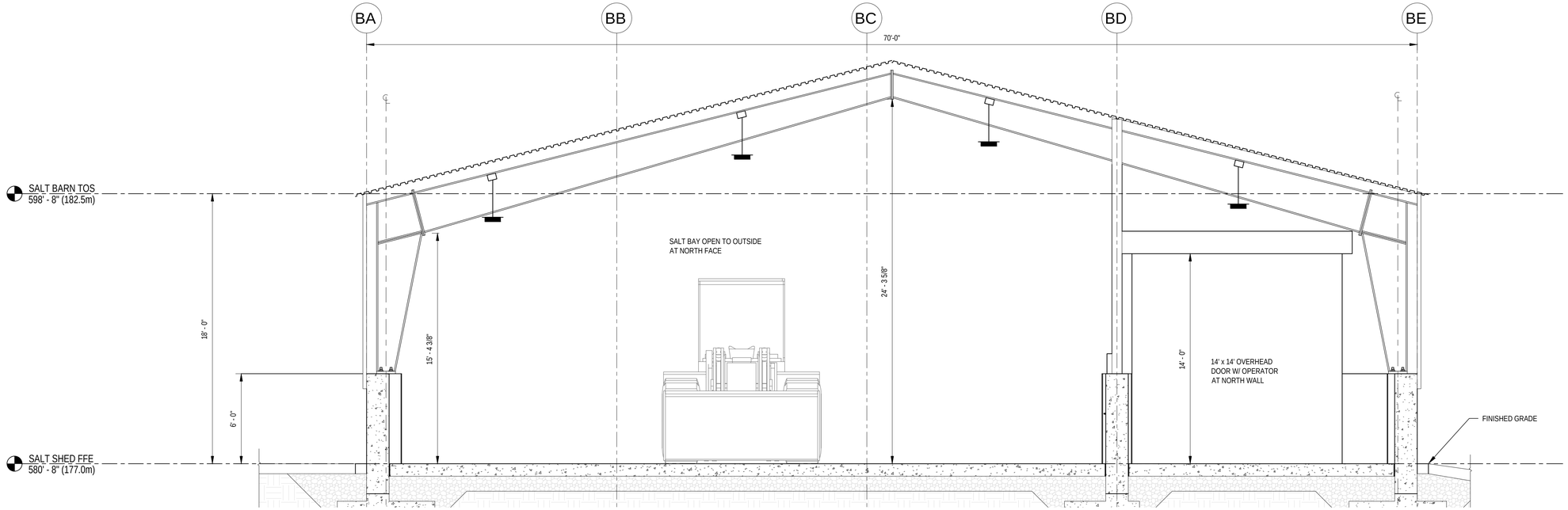

2 SALT BARN TRANSVERSE SECTION
1/4" = 1'-0"

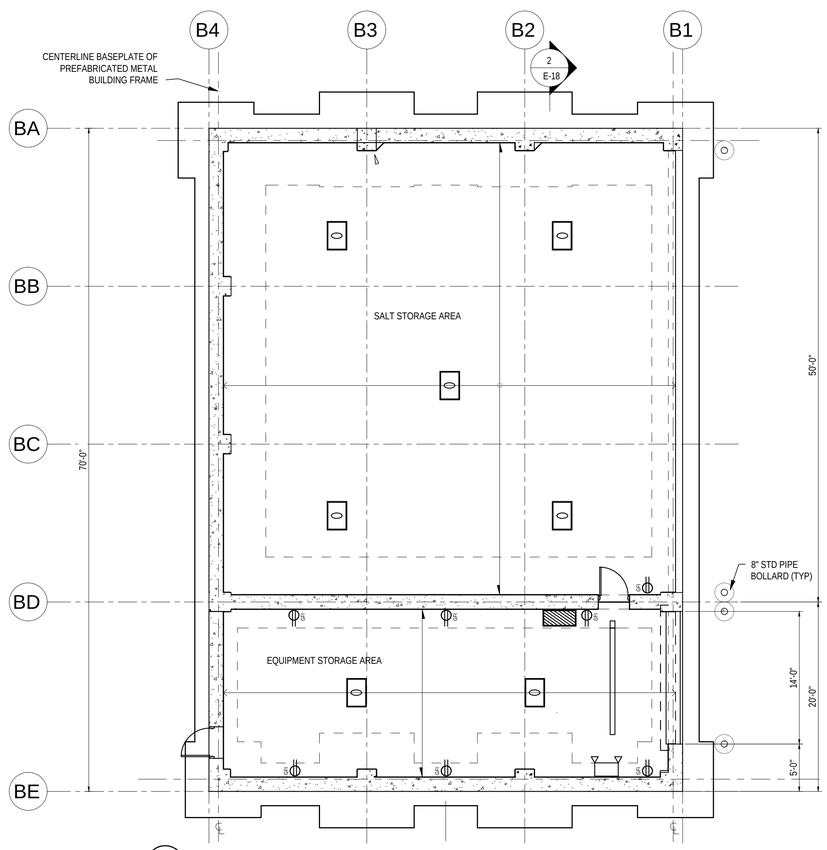

1 SALT BARN FLOOR PLAN
1/8" = 1'-0"

LEGEND

- PANELBOARD SB–PP–1
  120/240V, 3P. 4W
- EMERGENCY BATTERY PACK LIGHT FIXTURE
  UNILINE H–7260
- DUPLEX GFCI RECEPTACLE C/W 1 GANG
  STAINLESS STEEL GFCI COVER, 3R
- LED HIGH BAY LUMINAIRE – PERDENT
  MOUNTED GE, CAT. No.
  ABV3–0–24–57–WD–2Q–ST–B–Q–WHTE

NOTES:

1. CONTRACTOR TO INSTALL 2 COPPER CLAD GROUND RODS THERMIT WELDED TO #6 AWG BARE GROUND WIRE AT THE SIDE OF THE BUILDING AND EXTEND WITH #6 INSULATED GROUND WIRE VIA AN UNDERGROUND PVC SLEEVE TO PANELBOARD SB–PP–1 AS SERVICE GROUND.
2. COORDINATE INSTALLATION ALL ELECTRICAL EQUIPMENT WITH THE PREFAB SALT BUILDING MANUFACTURER.
3. ALL CONSTRUCTION SHALL BE IN CONFORMANCE WITH CSA C22.1, CANADIAN ELECTRICAL CODE, PART 1, SAFETY STANDARDS FOR ELECTRICAL INSTALLATIONS INCLUDING AND ESA AMENDMENTS.
4. THE HIGH BAY LUMINAIRES IS COMPLETE WITH OCCUPANCY SENSOR AND WILL REQUIRE ONE REMOTE CONTROL UNIT. CONTRACTOR WILL NEED TO WORK WITH THE OWNER TO PROGRAMME EACH LUMINAIRE.
5. AS SALT BUILDING HAS A POTENTIALLY CORROSIVE ENVIRONMENT. CONDUIT INSTALLATION SHOULD BE WITH PVC CONDUIT WITH EXPANSION JOINTS AND MOUNTED WITH GALVANIZED UNISTRUT. REFER TO NOTE 2 TO ENSURE BEST CONSTRUCTION PRACTICE.

IT IS A VIOLATION OF THE LAW FOR ANY PERSON, UNLESS ACTING UNDER THE DIRECT SUPERVISION OF A LICENSED ARCHITECT OR ENGINEER, TO ALTER IN ANY WAY AN ITEM BEARING THE SEAL OF AN ARCHITECT OR ENGINEER IS ALTERED, THE ALTERING ARCHITECT OR ENGINEER SHALL AFFIX TO THEIR ITEM THE SEAL AND THE NOTATION "ALTERED BY" FOLLOWED BY THEIR SIGNATURE AND THE DATE OF SUCH ALTERATION AND A SPECIFIC DESCRIPTION OF THE ALTERATION.

DISCLAIMER

MARK	DESCRIPTION	DATE	APPR
A	ISSUED FOR BID (NOT FOR CONST)	03/21/2024	

DESIGNED BY: Designer
DWN BY: Author
CKD BY: Checker
SUBMITTED BY:
DATE: 07/18/2022
SOLICITATION NO.:
CONTRACT NO.: 187926
FILE NAME: BM-360-BUF-SO-S000001-R1-Pare-Bridge-GEC-R22PARE 3.0 - Structural R21.rvt
SIZE: 22" X 34"
PLOTTED BY:
PLOT DATE: 9/18/2023

BUFFALO AND FORT ERIE PUBLIC BRIDGE AUTHORITY
xx

WSP USA Inc.
40 Lafayette Drive
Suite 20
Buffalo, N.Y. 14202
(716) 933-1210

BUFFALO AND FORT ERIE PUBLIC
BRIDGE AUTHORITY
PROJECT# XXX PARE 3.0

SALT BUILDING
ELECTRICAL LAYOUT

DRAWING NUMBER
E-18

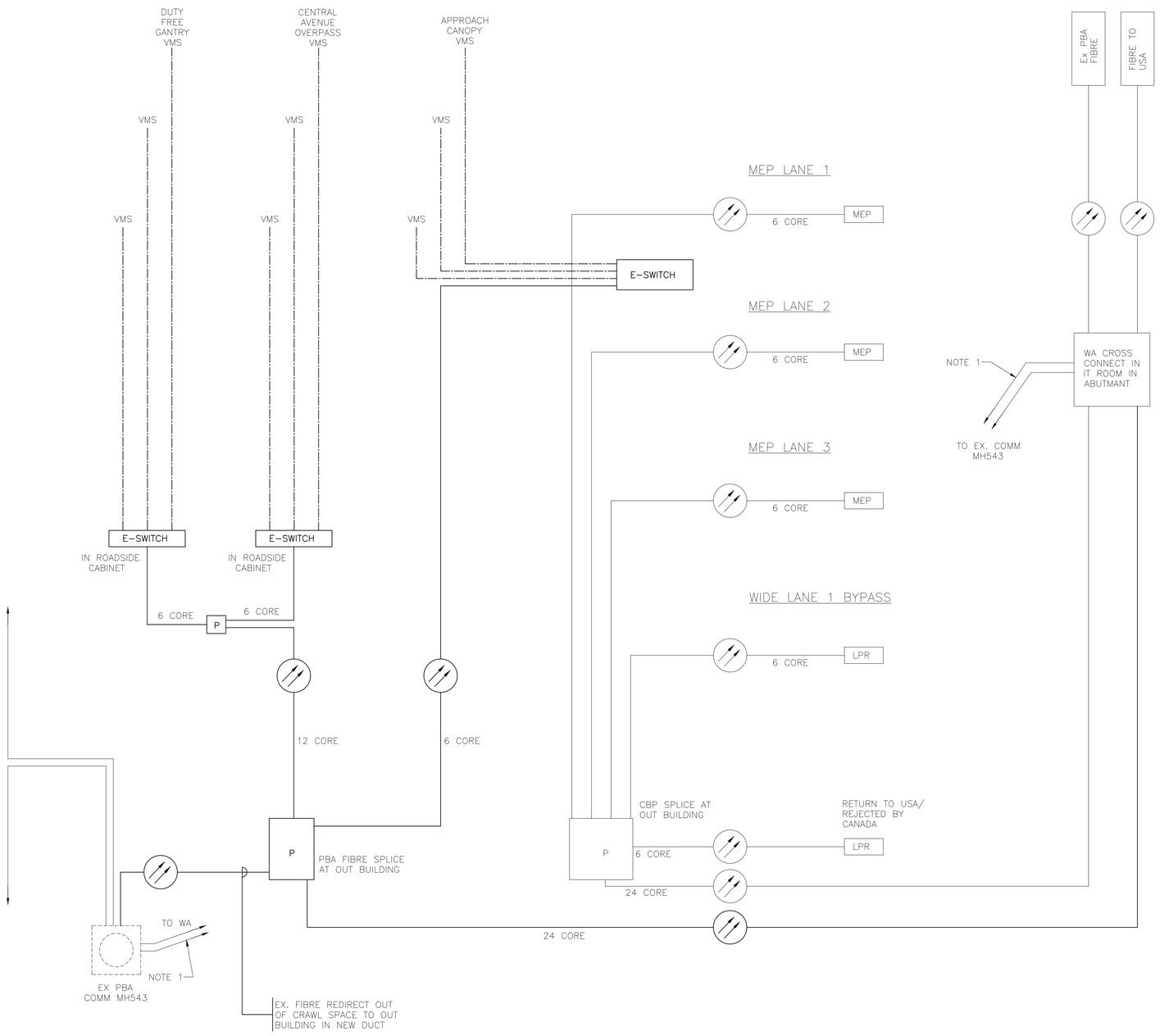

LEGEND

P — PASSIVE OPTICAL CORE SPLICE PEDESTAL

CAT 5 OUTDOOR RATIO ETHERNET COPPER CABLING

FIBRE OPTIC SINGLE MODE FIBRE CABLING, CORES AS NOTED

GENERAL NOTES:

A. EXISTING CABLES LEADING TO WA CROSS CONDUIT SHALL BE PULLED BACK & CONNECTED TO THE FIBRE. FACILITY IN THE OUT BUILDING THIS FREES ITEM FROM THE PEDESTRIAN TUNNEL & EXISTING VAULT THAT IS SLATED TO BE CONCRETE.

NOTES:

1. EXISTING FIBRE OPTIC CABLES TRANVERSE THE SITE VIA EXISTING ELECTRICAL VAULT DUCTS & CABLE TRAYS & DUCT SYSTEMS IN EXISTING PEDESTRIAN TUNNELS LEADING TO THROUGH THE WEST ABUTMENT (WA). EXISTING CABLES ALSO TRANVERSE THE SITE & EXISTING TO EXISTING DUCTS SYSTEMS BEYOND THE WEST (REAR) WALL OF WEST ABUTMENT.

NOT TO SCALE

IT IS A VIOLATION OF THE LAW FOR ANY PERSON, UNLESS ACTING UNDER THE DIRECT SUPERVISION OF A LICENSED ARCHITECT OR ENGINEER, TO ALTER AN ITEM IN ANY WAY. IF AN ITEM BEARING THE SEAL OF AN ARCHITECT OR ENGINEER IS ALTERED, THE ALTERING ARCHITECT OR ENGINEER SHALL AFFIX TO THE ITEM THE SEAL AND SIGNATURE AND THE DATE OF SUCH ALTERATION AND A SPECIFIC DESCRIPTION OF THE ALTERATION.

DISCLAIMER

MARK	DESCRIPTION	DATE	APPR.
A	ISSUED FOR BID (NOT FOR CONST)	03/21/2024	

DESIGNED BY: DOUG MCLEAN
DWN BY: K.G.
CKD BY: D.P.M.
SUBMITTED BY: WSP CANADA
FILE NAME: I:\Drawings\Electrical\data\2020\20M-00635-00 PARE 3.0
DATE: 09/15/2023
SOLICITATION NO.:
CONTRACT NO.:
PLOT DATE: 02/07/2024
PLOTTED BY: KG
SIZE: ANSI D

BUFFALO AND FORT ERIE PUBLIC BRIDGE AUTHORITY

WSP USA Inc.
50 Quaker Ridge Blvd.
Suite 111
Mamaroneck, 14202
(716) 853-1220

BUFFALO AND FORT ERIE PUBLIC BRIDGE AUTHORITY
PROJECT #
PARE 3.0 CANADIAN PLAZA IMPROVEMENTS

SITE COMM. SCHEMATIC

CROSSING PATHS ★ BUILDING FUTURES
FERRY PLACE BRIDGE

DRAWING NUMBER
C1

S:\data\2020\20M-00635-00 PARE 3.0\20M-00635-00-SCHEMATIC-1.dwg Wed, 07 Feb 2024 - 9:53am GordoleN

DUTY FREE EX SIGN STRUCTURE WITH NEW VMS REPLACING STATIC SIGNS

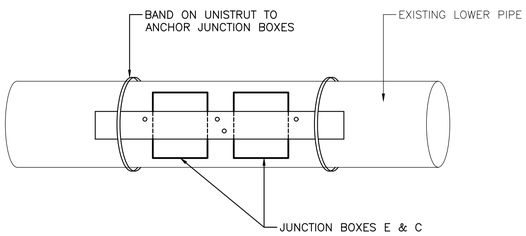

JUNCTION BOX ANCHOR DETAIL

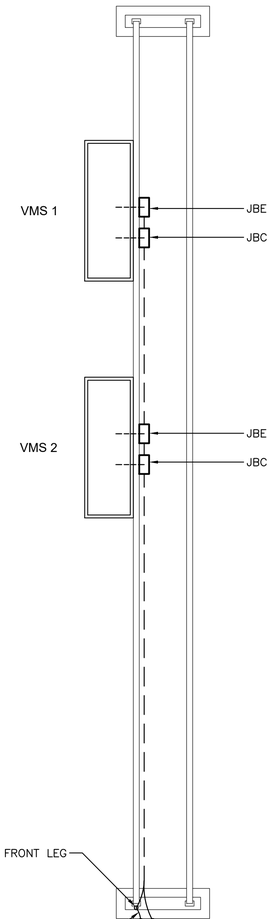

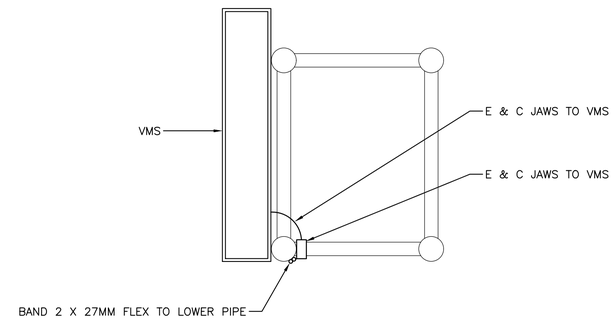

SECTION VIEW

GENERAL NOTES:

A. REMOVE STATIC SIGN BOARDS, CONFIRM NEW SIGN ALIGNMENT WITH PBA & REMOVE FLASHERS VMS & ALL WIRING & DUCT OFF OF STRUCTURE & BACK TO SUPPLY/CONTROL POINT.

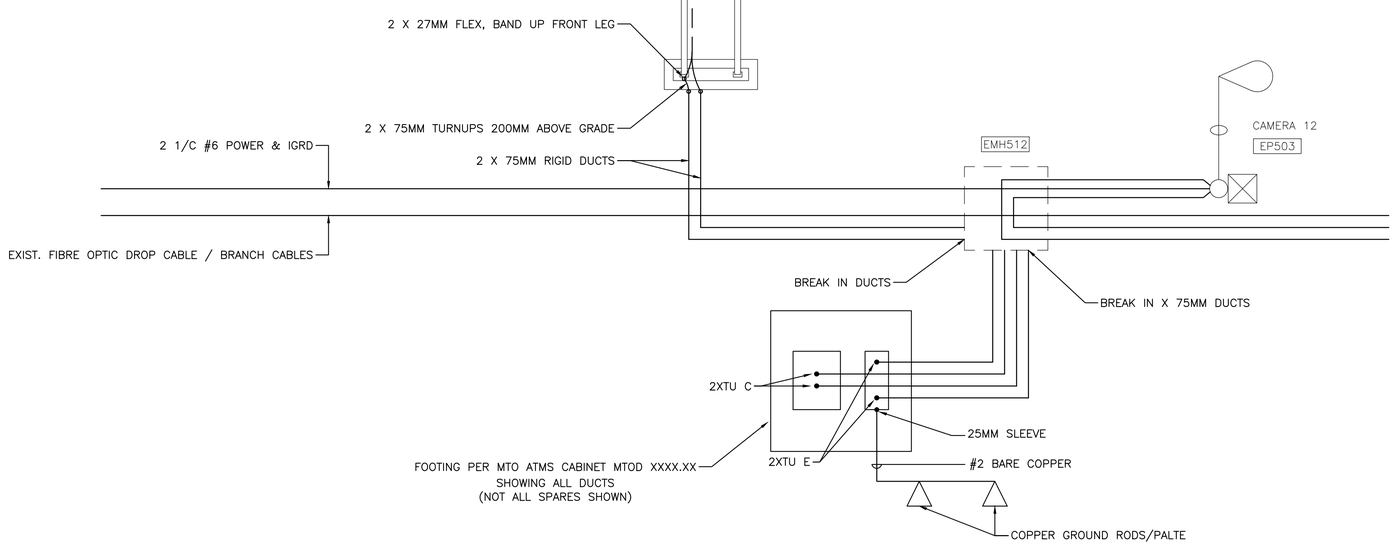

DUCTING DETAILS

N.T.S.

NOT TO SCALE

MARK	DESCRIPTION	DATE	APPR
A	ISSUED FOR BID (NOT FOR CONST)	02/01/2024	

IT IS A VIOLATION OF THE LAW FOR ANY PERSON, UNLESS ACTING UNDER THE DIRECT SUPERVISION OF A LICENSED ARCHITECT OR ENGINEER, TO ALTER AN ITEM IN ANY WAY. IF AN ITEM BEARING THE SEAL OF AN ARCHITECT OR ENGINEER IS ALTERED, THE ALTERING ARCHITECT OR ENGINEER SHALL AFFIX TO THEIR ITEM THE SEAL AND THE NOTATION "ALTERED BY" FOLLOWED BY THEIR SIGNATURE AND THE DATE OF SUCH ALTERATION AND A SPECIFIC DESCRIPTION OF THE ALTERATION.

DISCLAIMER

DESIGNED BY: MIKE J. WILDE
DATE: 01/09/2024
DWN BY: N.F.G
CKD BY: M.J.W.
SOLICITATION NO.:
SUBMITTED BY: WSP CANADA
CONTRACT NO.:
FILE NAME: pw:www-dev.bentley.com:pw-us-pw:Documents\200\ Buffalo Fort Erie Public Bridge Authority - Duty Free\ Design\11 VMS\11.5.3_TRIBECA\Tribeca\DUTY FREE EX SIGN STRUCTURE WITH NEW VMS REPLACING STATIC SIGNS.dwg
SIZE: 22" X 34"
PLOTTED BY: N.F.G.
PLOTTED ON: 02/07/2024

BUFFALO AND FORT ERIE PUBLIC BRIDGE AUTHORITY

WSP CAN Inc.
401 Bridge Ave
Suite 300
Buffalo, NY 14202
(716) 853-1220

BUFFALO AND FORT ERIE PUBLIC BRIDGE AUTHORITY
PROJECT# XXX PARE 3.0
DUTY FREE VMS
PHYSICAL DETAILS

CROSSING PATHS ★ BUILDING FUTURES
THE PEACE BRIDGE

DRAWING NUMBER
C2

C:\pw_wrk\wsp-ca18\dms09629\A20M-00635-00-W01.dwg Wed, 07 Feb 2024 - 9:28am GoradeN

CENTRAL AVE NEW VMS POWER ARRANGEMENTS & DUTY FREE – SIGN # INDICATED

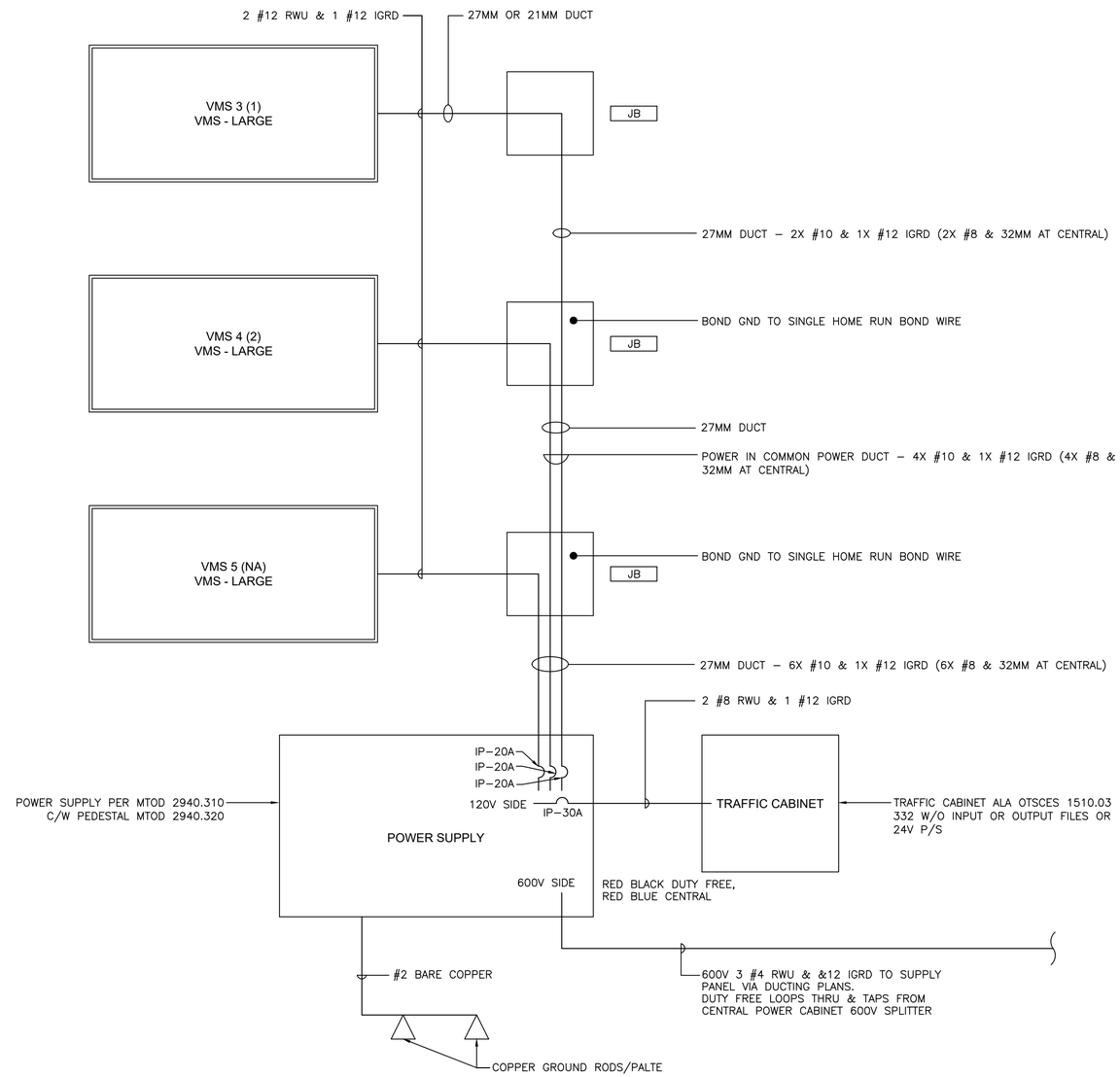

POWER SCHEMATIC

N.T.S.

NOT TO SCALE

IT IS A VIOLATION OF THE LAW FOR ANY PERSON, UNLESS ACTING UNDER THE DIRECT SUPERVISION OF A LICENSED ARCHITECT OR ENGINEER, TO ALTER AN ITEM IN ANY WAY. IF AN ITEM BEARING THIS SEAL OF AN ARCHITECT OR ENGINEER IS ALTERED, THE ALTERING ARCHITECT OR ENGINEER SHALL AFFIX TO THEIR ITEM THE SEAL AND THE NOTATION "ALTERED BY" FOLLOWED BY THEIR SIGNATURE AND THE DATE OF SUCH ALTERATION AND A SPECIFIC DESCRIPTION OF THE ALTERATION.

DISCLAIMER

MARK	DESCRIPTION	DATE	APPR.
A	ISSUED FOR BID (NOT FOR CONST)	02/01/2024	

DESIGNED BY: MIKE J. WILDE
DATE: 01/09/2024
DWN BY: N.F.G.
CKD BY: M.J.W.
SOLICITATION NO.:
SUBMITTED BY: WSP CANADA
CONTRACT NO.:
FILE NAME: pw:wsp-ca-pro.bentley.com:wsp-ca-pw-ProDocuments\200_Buffalo and Fort Erie Public Bridge Authority - Central Ave_Project_1_1_1

DUTY FREE
EXISTING STATIC SIGN GANTRY
WITH NEW VMS REPLACING STATIC SIGNS

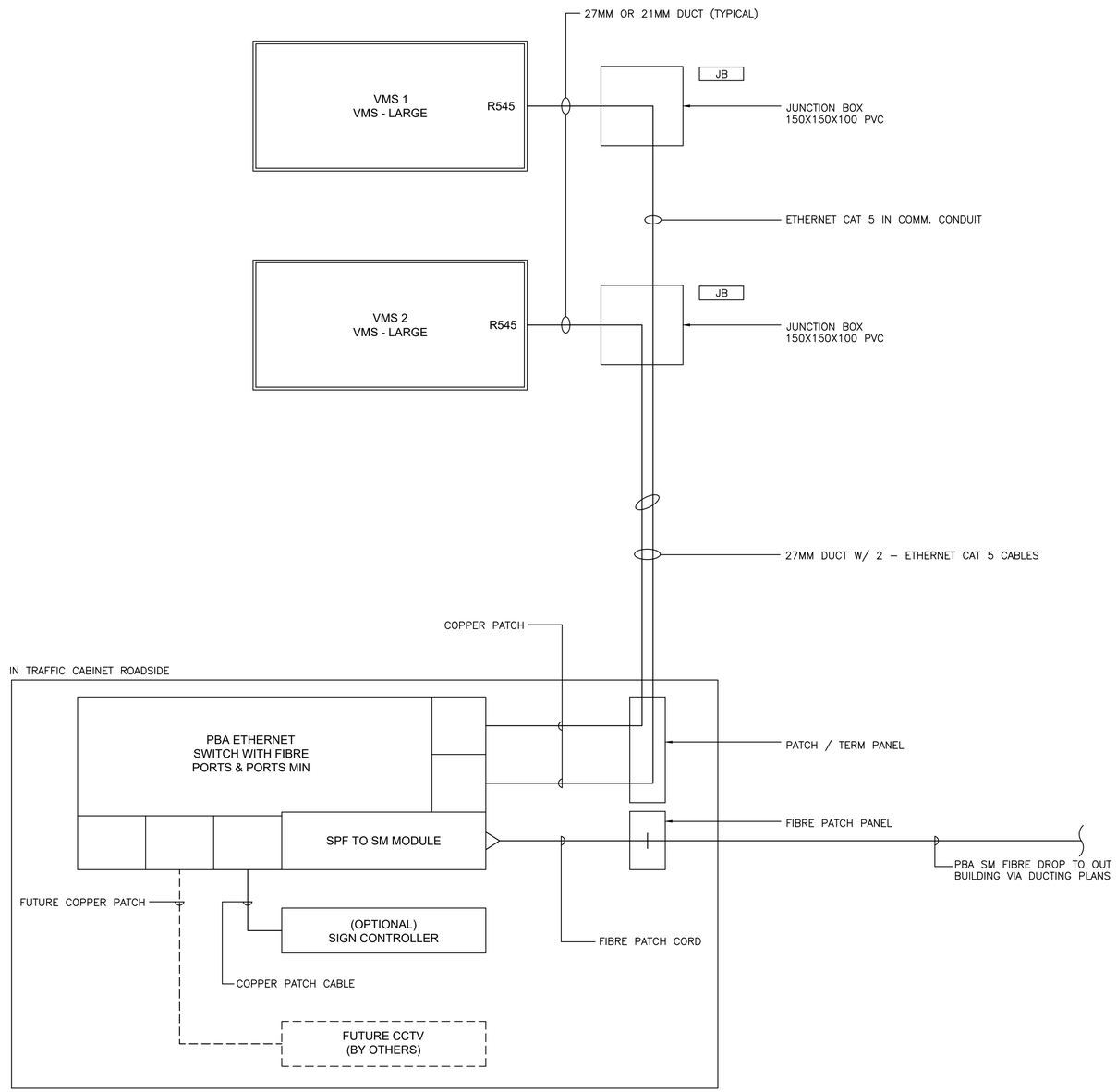

COMMUNICATIONS SCHEMATIC

N.T.S.

NOT TO SCALE

MARK	DESCRIPTION	DATE	APPR.
A	ISSUED FOR BID (NOT FOR CONST)	02/01/2024	

IT IS A VIOLATION OF THE LAW FOR ANY PERSON, UNLESS ACTING UNDER THE DIRECT SUPERVISION OF A LICENSED ARCHITECT OR ENGINEER, TO ALTER AN ITEM IN ANY WAY. IF AN ITEM BEARING THE SEAL OF AN ARCHITECT OR ENGINEER IS ALTERED, THE ALTERING ARCHITECT OR ENGINEER SHALL AFFIX TO THEIR ITEM THE SEAL AND THE NOTATION "ALTERED BY" FOLLOWED BY THEIR SIGNATURE AND THE DATE OF SUCH ALTERATION AND A SPECIFIC DESCRIPTION OF THE ALTERATION.

DISCLAIMER

DESIGNED BY: MIKE J. WILDE
DWN BY: N.F.G.
CKD BY: M.J.W.
SUBMITTED BY: WSP CANADA
FILE NAME: pw:\\wsp-can.bentley.com:pw-eu-pw-01\Documents\2021 Buffalo Bridge Authority - Bridge Improvements\00635 Design\11 DWGS\11.5 TRIBECA\Tribeca\00635-00-C01
DATE: 01/09/2024
SOLICITATION NO.:
CONTRACT NO.:
PLOTTED BY: N.F.G.
PLOT DATE: 02/07/2024
SIZE: 22" X 34"

BUFFALO AND FORT ERIE PUBLIC BRIDGE AUTHORITY

WSP CIS, Inc.
40 Lloyd Ave
Suite 300
Buffalo, NY 14202
(716) 853-1220

BUFFALO AND FORT ERIE PUBLIC BRIDGE AUTHORITY
PROJECT# XXX PARE 3.0

DUTY FREE VMS COMMUNICATIONS

CROSSING PATHS ★ BUILDING FUTURES
THE PEACE BRIDGE

DRAWING NUMBER
C4

C:\pw_work\wsp-ca18\dms09629\A20M-00635-00-C01.dwg Wed, 07 Feb 2024 - 9:31am GarcidaN

CENTRAL AVENUE OVERPASS EXISTING STATIC SIGNS REMOVE & NEW VMS REPLACING STATIC SIGNS

GENERAL NOTES:

A. REMOVE STATIC SIGN BOARDS, CONFIRM NEW SIGN ALIGNMENT WITH PBA & REMOVE FLASHERS VMS & ALL WIRING & DUCT OFF OF STRUCTURE & BACK TO SUPPLY/CONTROL POINT.

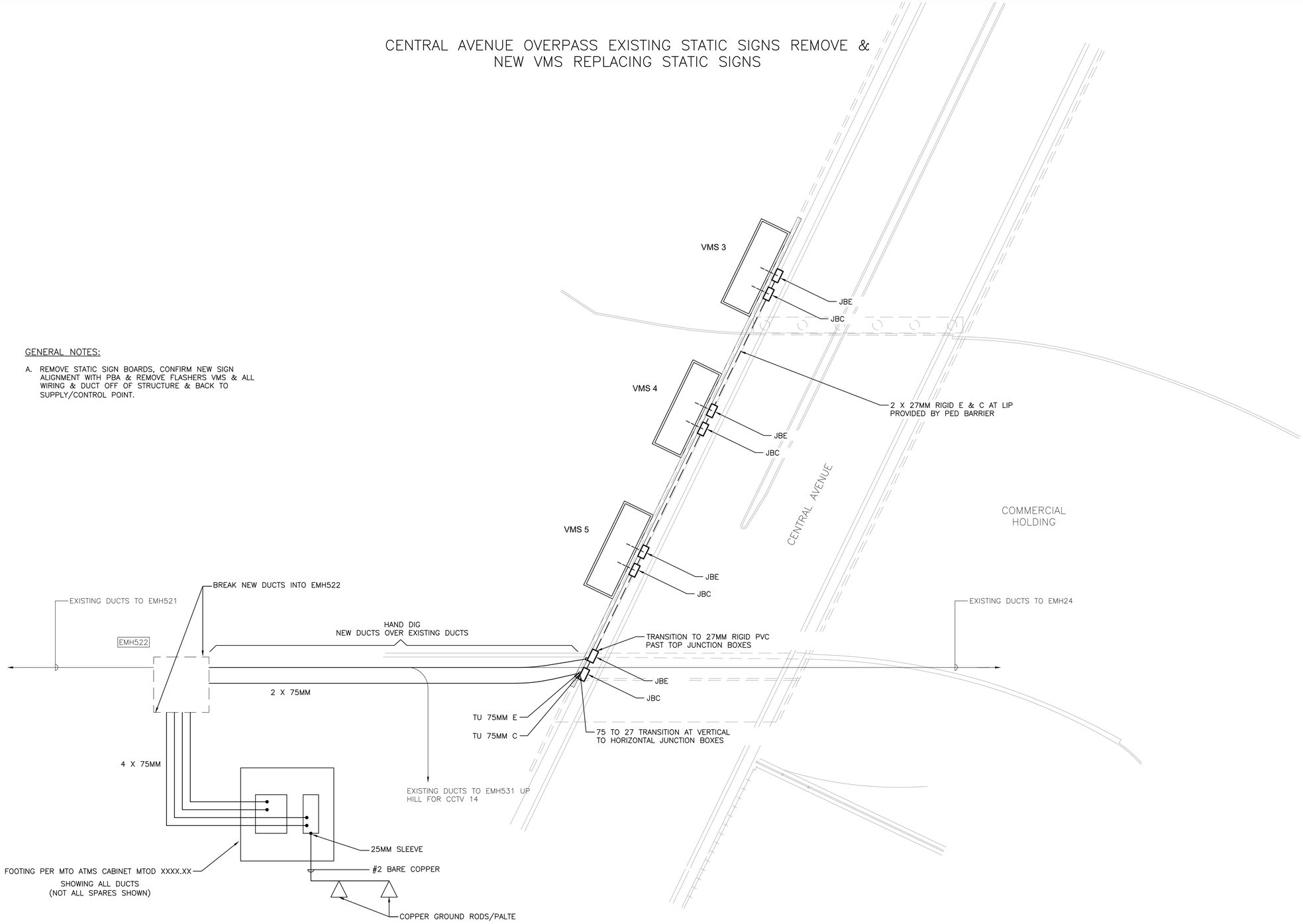

DUCTING DETAILS

N.T.S.

NOT TO SCALE

IT IS A VIOLATION OF THE LAW FOR ANY PERSON, UNLESS ACTING UNDER THE DIRECT SUPERVISION OF A LICENSED ARCHITECT OR ENGINEER, TO ALTER AN ITEM IN ANY WAY. IF AN ITEM BEARING THE SEAL OF AN ARCHITECT OR ENGINEER IS ALTERED, THE ALTERING ARCHITECT OR ENGINEER SHALL AFFIX TO THEIR ITEM THE SEAL AND THE NOTATION "ALTERED BY" FOLLOWED BY THEIR SIGNATURE AND THE DATE OF SUCH ALTERATION AND A SPECIFIC DESCRIPTION OF THE ALTERATION.

DISCLAIMER

MARK	DESCRIPTION	DATE	APPR.
A	ISSUED FOR BID (NOT FOR CONST)	03/01/2024	

DESIGNED BY: MIKE J. WILDE
DWN BY: N.F.G.
CKD BY: M.J.W.
SUBMITTED BY: WSP CANADA
FILE NAME: Drawing-C1 (V9P4-1.5) (TREDAC)(Sheet-XXXXXXX-C5.dwg)
SIZE: 22" X 34"
PLOTTED BY: N.F.G.
DATE: 01/09/2024
SOLICITATION NO.:
CONTRACT NO.:
PLOT DATE: 02/07/2024

BUFFALO AND FORT ERIE PUBLIC BRIDGE AUTHORITY

WSP USA Inc.
401 Main Street
Suite 300
Buffalo, N.Y. 14202
(716) 853-1220

BUFFALO AND FORT ERIE PUBLIC BRIDGE AUTHORITY
PROJECT# XXX PARE 3.0

CENTRAL VMS
PHYSICAL DETAILS

CROSSING PATHS ★ BUILDING FUTURES
THE PEACE BRIDGE

DRAWING NUMBER
C5

C:\pw_wrk\wsp-ca18\dms09629\A20M-00635-00-W01.dwg Wed, 07 Feb 2024 - 9:33am GonzalesN

CENTRAL AVENUE OVERPASS
EXISTING STATIC SIGN MOUNTS REMOVE & NEW VMS REPLACING STATIC SIGNS

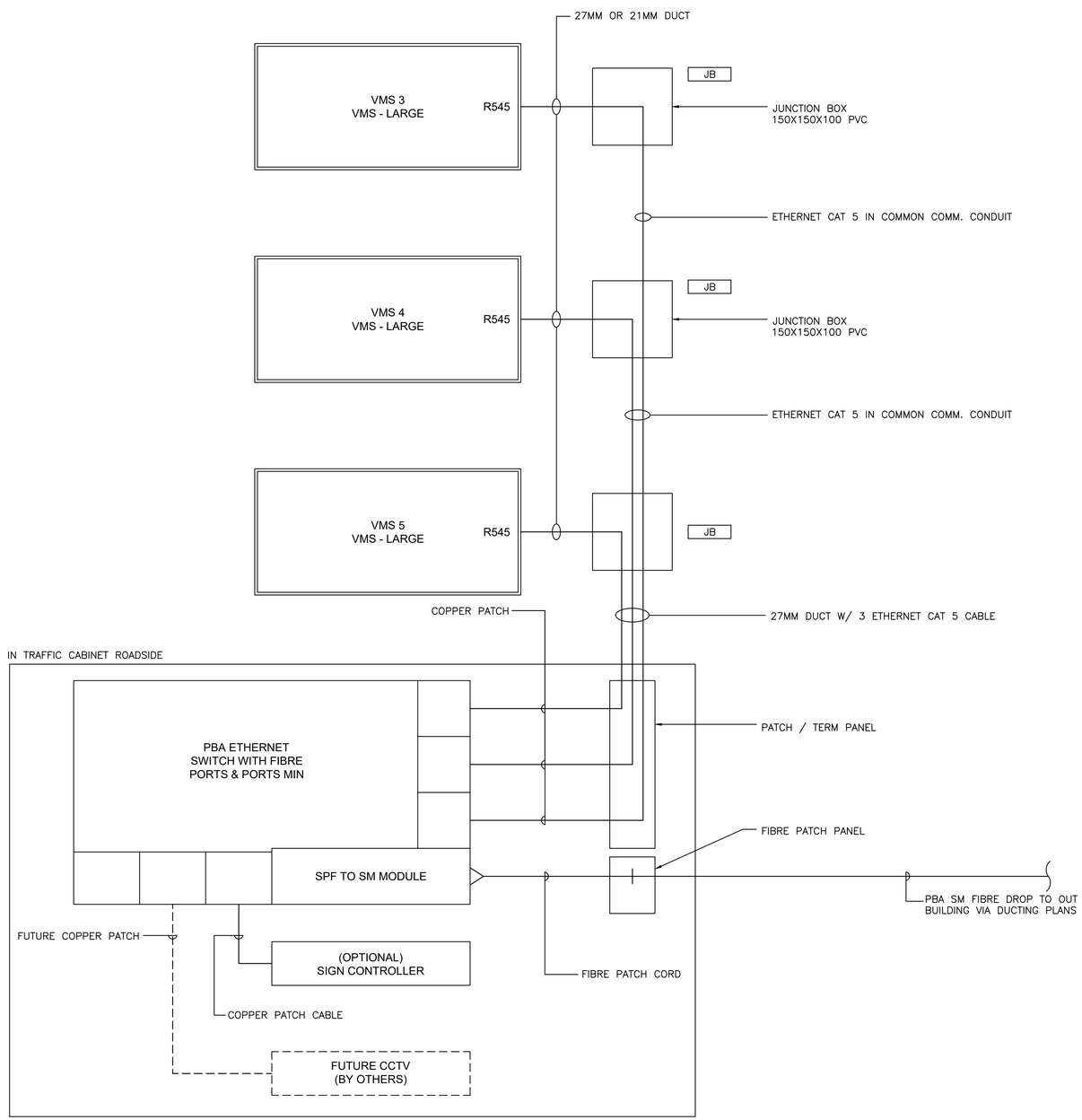

COMMUNICATIONS SCHEMATIC

N.T.S.

NOT TO SCALE

IT IS A VIOLATION OF THE LAW FOR ANY PERSON, UNLESS ACTING UNDER THE DIRECT SUPERVISION OF A LICENSED ARCHITECT OR ENGINEER, TO ALTER AN ITEM IN ANY WAY. IF AN ITEM BEARING THE SEAL OF AN ARCHITECT OR ENGINEER IS ALTERED, THE ALTERING ARCHITECT OR ENGINEER SHALL AFFIX TO THEIR ITEM THE SEAL AND THE NOTATION "ALTERED BY" FOLLOWED BY THEIR SIGNATURE AND THE DATE OF SUCH ALTERATION AND A SPECIFIC DESCRIPTION OF THE ALTERATION.

MARK	DESCRIPTION	DATE	APPR.
A	ISSUED FOR BID (NOT FOR CONST)	03/01/2024	

DISCLAIMER

DESIGNED BY: MIKE J. WILDE
DATE: 01/09/2024
DWN BY: N.F.G.
CKD BY: M.J.W.
SOLICITATION NO.:
SUBMITTED BY: WSP CANADA
CONTRACT NO.:
FILE NAME: pw:wsp-ca.bentley.com:ca-ca-pw-ID0documents0001 Budget 11 (WP)\ 1 1 5 \ TRIBECA\Tribeca\Tribeca\Tribeca\C001
PLOTTED BY: N.F.G.
PLOT DATE: 02/07/2024
SIZE: 22" X 34"

BUFFALO AND FORT ERIE PUBLIC BRIDGE AUTHORITY

WSP USA Inc.
40 Lloyd Ave
Suite 300
Buffalo, NY 14202
(716) 853-1220

BUFFALO AND FORT ERIE PUBLIC BRIDGE AUTHORITY
PROJECT# XXX PARE 3.0
CENTRAL AVE. VMS COMMUNICATIONS

CROSSING PATHS ★ BUILDING FUTURES
THE PEACE BRIDGE

DRAWING NUMBER
C6

C:\pw_work\wsp-ca18\dms09629\A20M-00635-00-C01.dwg Wed, 07 Feb 2024 - 9:36am GarcidaN

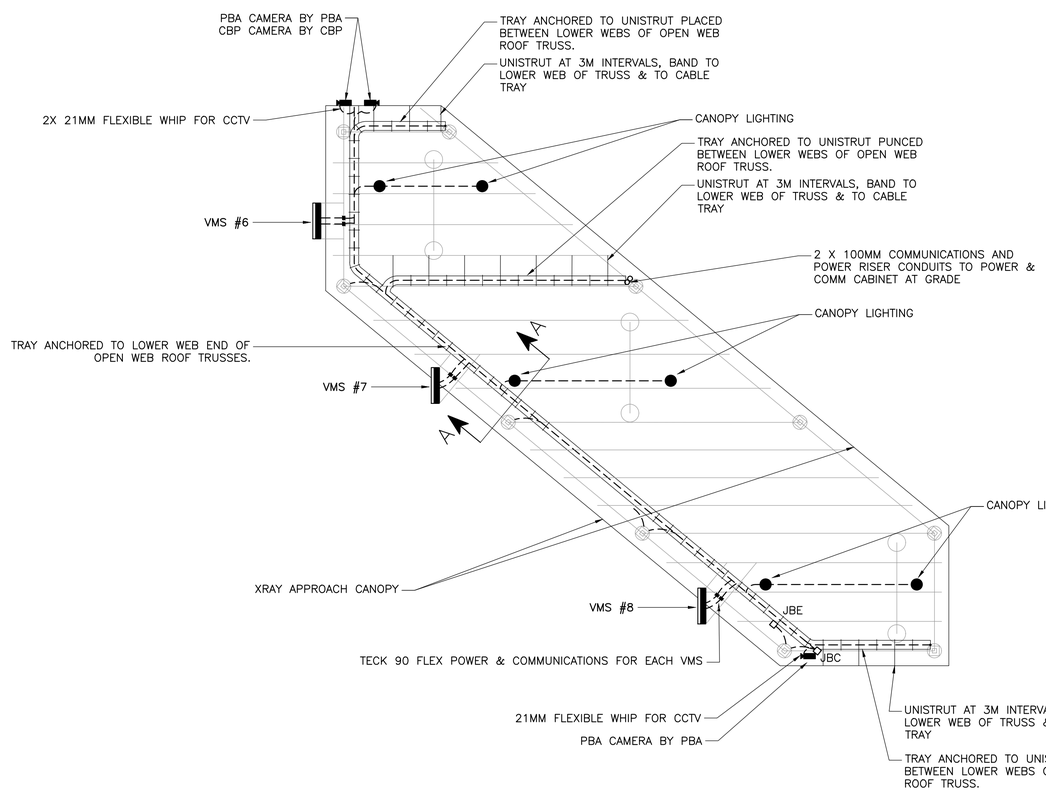

DUCTING/CABLING DETAILS
PARE 3.0 APPROACH CANOPY

N.T.S.

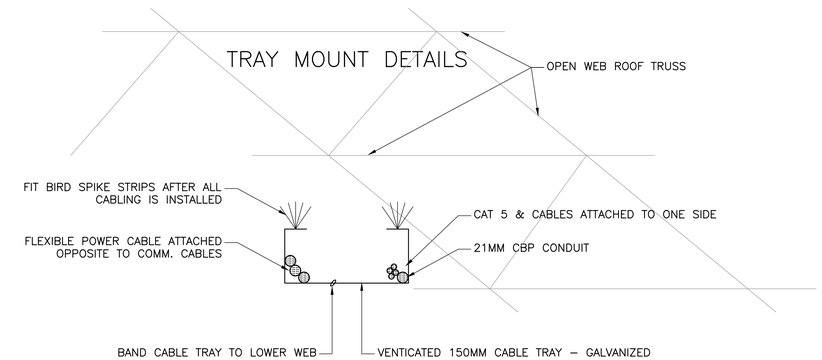

DETAIL A–A

N.T.S.

GENERAL NOTES:

A. POWER CABLES SHOWN IS SYMBOLIC
- 1–TECK 90" TO EACH VMS.
- LIGHTING CIRCUITS.
- 1–TECK 90 TO EACH UTILITY RECEPTACLE.

B. COMMUNICATION CABLES SHOWN IS SYMBOLIC
- 1–CAT 5 ETHER TO EACH VMS
- 1–CAT 5 ETHER TO EACH PBA CAMERA
- 1–CAT 5 ETHER IN HYDROTITE TO CBP CAMERA

NOT TO SCALE

IT IS A VIOLATION OF THE LAW FOR ANY PERSON, UNLESS ACTING UNDER THE DIRECT SUPERVISION OF A LICENSED ARCHITECT OR ENGINEER, TO ALTER AN ITEM IN ANY WAY. IF AN ITEM BEARING THE SEAL OF AN ARCHITECT OR ENGINEER IS ALTERED, THE ALTERING ARCHITECT OR ENGINEER SHALL AFFIX TO THEIR ITEM THE SEAL AND THE NOTATION "ALTERED BY" FOLLOWED BY THEIR SIGNATURE AND THE SPECIFIC DESCRIPTION OF ALTERATION AND A SPECIFIC DESCRIPTION OF THE ALTERATION.

DISCLAIMER

MARK	DESCRIPTION	DATE	APPR
A	ISSUED FOR BID (NOT FOR CONST)	02/07/2024	

DESIGNED BY: MIKE J. WILDE
DATE: 02/07/2024
DWN BY: N.F.G
CKD BY: M.J.W.
SOLICITATION NO.:
SUBMITTED BY: WSP CANADA
CONTRACT NO.:
FILE NAME: C:\wsp-pw-ca-delivery-central-prod-eu-west-1-950customers-c0ci5\dms09629\A20M-00535-00-D01.dwg
Dwg=A1 (1 WIDE x 1.5 LONG)(ISO-A1)(841.00x1189.00)
PLOTTED BY: N.F.G.
PLOT DATE: 02/07/2024
SIZE: 22" X 34"

BUFFALO AND FORT ERIE PUBLIC BRIDGE AUTHORITY

WSP USA Inc.
403 Lakeshore Drive
Suite 300
Buffalo, N.Y. 14202
(716) 853-1220

BUFFALO AND FORT ERIE PUBLIC BRIDGE AUTHORITY
PROJECT# XXX PARE 3.0

APPROACH CANOPY
PHYSICAL DETAILS

CROSSING PATHS ★ BUILDING FUTURES
THE PEACE BRIDGE

DRAWING NUMBER
C7

C:\pw_wrk\wsp-ca1R\dms09629\A20M-00535-00-D01.dwg Wed, 07 Feb 2024 - 9:38am GaroldeN

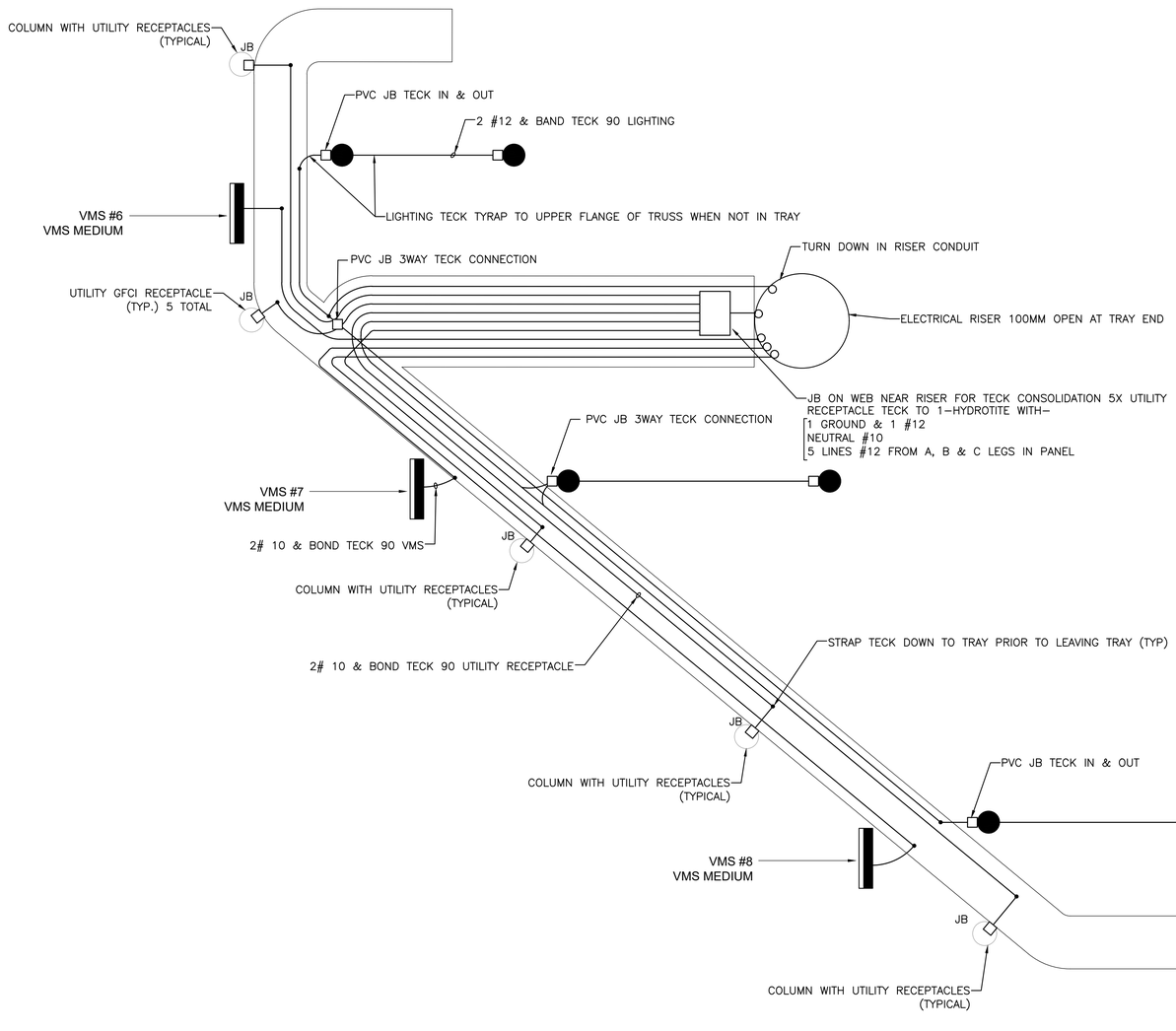

APPROACH CANOPY VMS & UTILITY RECEPTACLES & LIGHTING WIRING DIAGRAM

N.T.S.

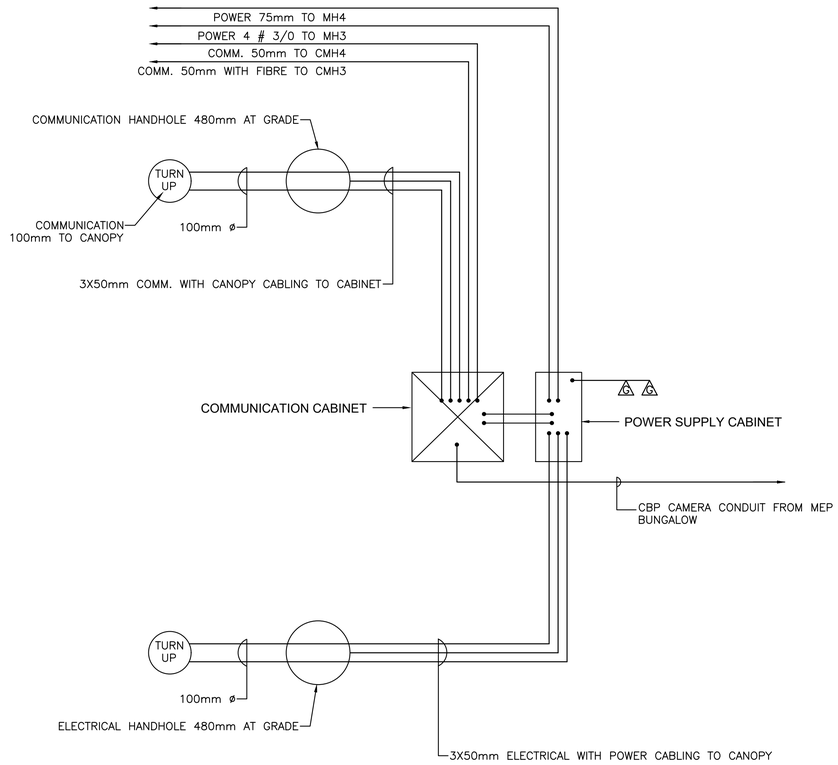

WIRING DIAGRAM AT GRADE

N.T.S.

NOT TO SCALE

IT IS A VIOLATION OF THE LAW FOR ANY PERSON, UNLESS ACTING UNDER THE DIRECT SUPERVISION OF A LICENSED ARCHITECT OR ENGINEER, TO ALTER AN ITEM IN ANY WAY. IF AN ITEM BEARING THE SEAL OF AN ARCHITECT OR ENGINEER IS ALTERED, THE ALTERING ARCHITECT OR ENGINEER SHALL AFFIX TO THEIR ITEM THE SEAL AND THE NOTATION "ALTERED BY" FOLLOWED BY THEIR SIGNATURE AND THE DATE OF SUCH ALTERATION AND A SPECIFIC DESCRIPTION OF THE ALTERATION.

DISCLAIMER

MARK	DESCRIPTION	DATE	APPR.
A	ISSUED FOR BID (NOT FOR CONST)	09/01/2024	

DATE: 02/07/2024
SOLICITATION NO.:
CONTRACT NO.:
PLOT DATE: 02/07/2024

DESIGNED BY: MIKE J. WILDE
DWN BY: N.F.G.
CKD BY: M.J.W.
SUBMITTED BY: WSP CANADA
FILE NAME: pw:\\wsp-ca.bentley.com:ca-pw-ab\Bloomerang\00135...\Approach Canopy VMS & Utility Receptacles & Lighting Wiring Diagram.dwg
SIZE: 22" X 34"
PLOTTED BY: N.F.G.

BUFFALO AND FORT ERIE PUBLIC BRIDGE AUTHORITY

WSP USA Inc.
4211 Yonge Street
Suite 320
Toronto, N.Y. 14202
(716) 853-1220

BUFFALO AND FORT ERIE PUBLIC BRIDGE AUTHORITY
PROJECT# XXX PARE 3.0
APPROACH CANOPY WIRING DIAGRAM

CROSSING PATHS ★ BUILDING FUTURES
THE PEACE BRIDGE

DRAWING NUMBER
C8

C:\pw_wrk\wsp-ca18\dms09629\A20M-00635-00-W01.dwg Wed, 07 Feb 2024 - 1:54pm GoroldeN

PARE 3.0 APPROACH CANOPY
NEW VMS SIGNS

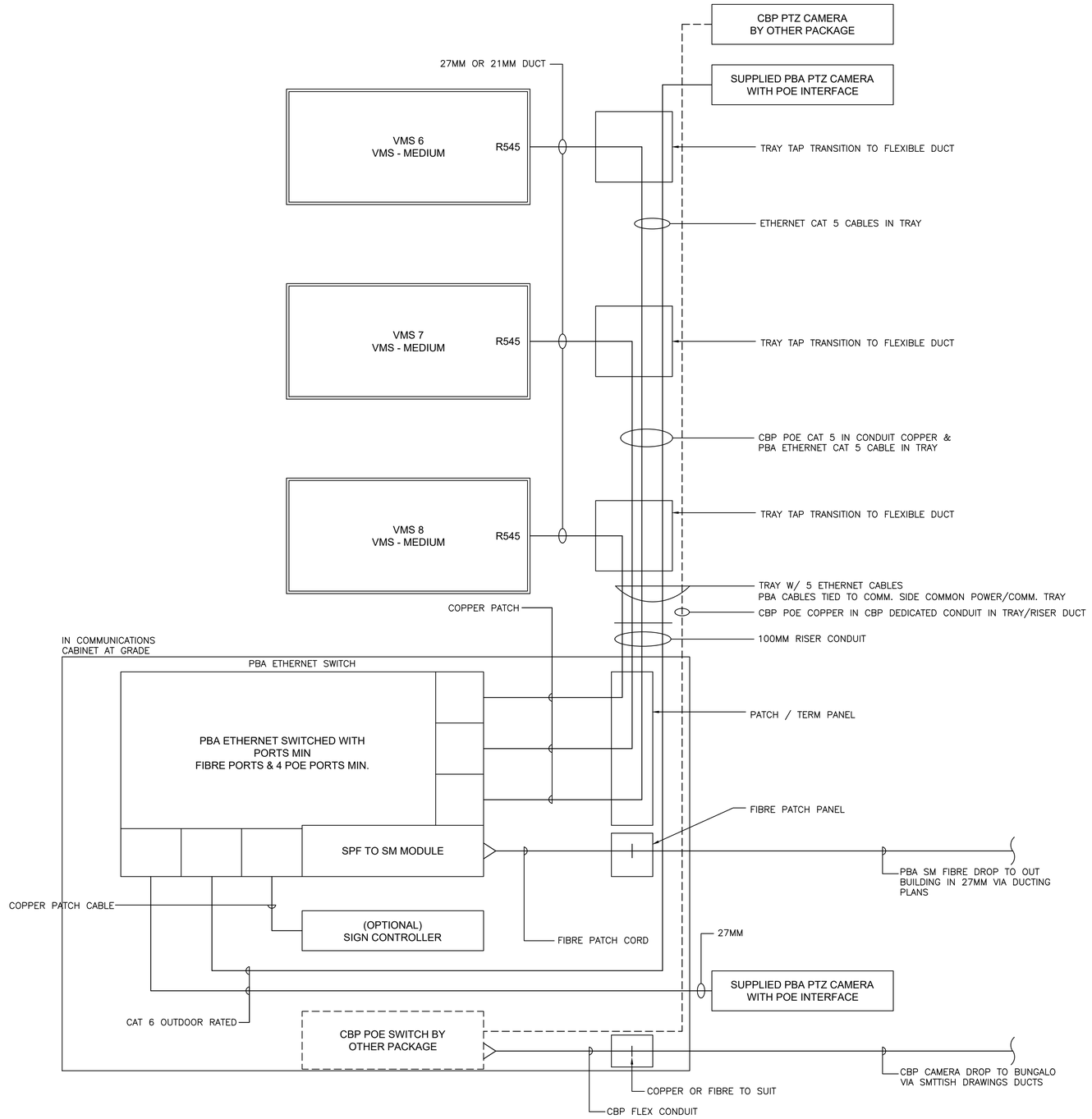

COMMUNICATIONS SCHEMATIC

N.T.S.

NOT TO SCALE

IT IS A VIOLATION OF THE LAW FOR ANY PERSON, UNLESS ACTING UNDER THE DIRECT SUPERVISION OF A LICENSED ARCHITECT OR ENGINEER, TO ALTER AN ITEM IN ANY WAY. IF AN ITEM BEARING THE SEAL OF AN ARCHITECT OR ENGINEER IS ALTERED, THE ALTERING ARCHITECT OR ENGINEER SHALL AFFIX TO THEIR ITEM THE SEAL AND THE NOTATION "ALTERED BY" FOLLOWED BY THEIR SIGNATURE AND THE DATE OF SUCH ALTERATION AND A SPECIFIC DESCRIPTION OF THE ALTERATION.

DISCLAIMER

MARK	DESCRIPTION	DATE	APPR.
A	ISSUED FOR BID (NOT FOR CONST)	03/07/2024	

DESIGNED BY: MIKE J. WILDE
DATE: 01/09/2024
DWN BY: N.F.G.
CKD BY: M.J.W.
SOLICITATION NO.:
SUBMITTED BY: WSP CANADA
CONTRACT NO.:
FILE NAME: pw:\\wsp-ca\ca\projects\buffalo and fort erie public bridge authority - 20230000 - pare approach canopy\00 - admin\01 - project management\00 - project plan\01 - scope\02 - design\01 - 3.0 approach canopy\02 - design\01 - 3.0 approach canopy\02 - design\01 - 3.0 approach canopy - 20230000-00-c01.dwg
Designed in Version 2.5.0, 17800Z-AC(Release)-(X64)
SIZE: 22" X 34"
PLOTTED BY: N.F.G.
PLOT DATE: 02/07/2024

BUFFALO AND FORT ERIE PUBLIC BRIDGE AUTHORITY

WSP CDA Inc.
421 Ontario Street
Suite 300
Buffalo, N.Y. 14202
(716) 853-1220

BUFFALO AND FORT ERIE PUBLIC BRIDGE AUTHORITY
PROJECT# XXX PARE 3.0
APPROACH CANOPY COMMUNICATIONS

CROSSING PATHS ★ BUILDING FUTURES
THE PEACE BRIDGE

DRAWING NUMBER
C9

C:\pw_wrk\wsp-ca18\dms09629\A20M-00635-00-C01.dwg Wed, 07 Feb 2024 - 9:43am GoradeN

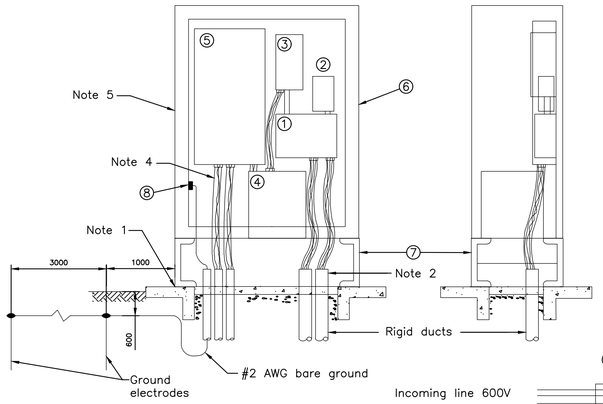

1. Splitter, 600V maximum, 3 wire.
2. Lightning arrestor, 3 pole, 650V max.
3. Integral fused breaker, 2 pole, 600V see quantity sheets for sizes. See wiring diagrams for phase designation.
4. Transformer, 600V primary, 120/240V secondary, 10kVA. See wiring diagrams for phase designation.
5. Panel board. Panel Board shall be: 12 circuits, 1Ø, 120/240V, 100Amp with 10kVA transformers.
6. Power supply cabinet – 1220H x 915W x 405D stainless steel.
7. Pedestal – (see MTOD 2940.320).
8. Cabinet ground bus.

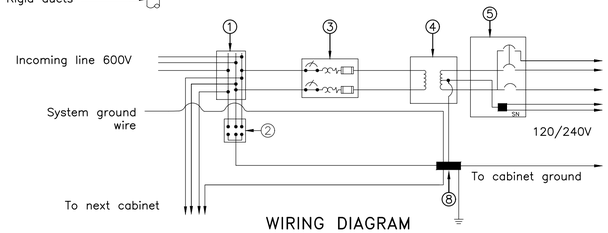

WIRING DIAGRAM

NOTES:

A. All dimensions are in millimeters unless otherwise shown.

1. Cabinet to be sealed around bottom perimeter with neoprene gasket.
2. Seal all conduit openings.
3. Panelboard is required where indicated in quantity sheets.
4. All cables within cabinet shall be installed in non metallic liquidtight ducts and connectors.
5. Power supply cabinet to be secured to pedestal with four 16mm dia. x 25mm long stainless steel machine bolts, flat washers & lockwashers.

MINISTRY OF TRANSPORTATION ONTARIO DRAWING	Date	Sep. 2010	Rev	2
ADVANCED TRAFFIC MANAGEMENT SYSTEM POWER SUPPLY CABINET 10KVA	_ MODIFIED BY: WSP CANADA _ JAN. 2024			
	MTOD – 2940.310M			

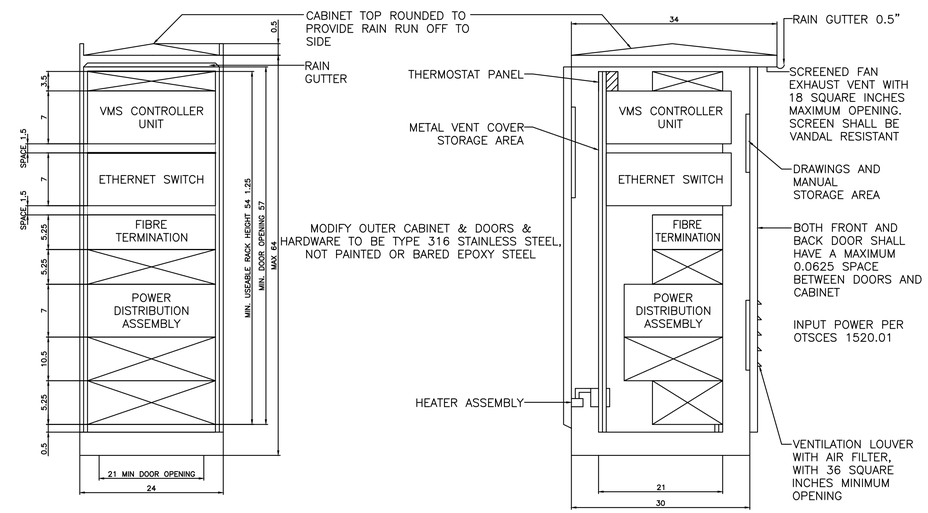

SIDE VIEW

NOTES:

A. ALL DIMENSIONS ARE IN MILLIMETERS UNLESS OTHERWISE SHOWN.

ONTARIO TRAFFIC SIGNAL CONTROL EQUIPMENT	Date	92 06 01	Rev	
SPECIFICATIONS	OTSCES – 1510.03M			
332 CABINET–RACK ASSIGNMENT	MODIFIED BY: WSP CANADA JAN. 2024			

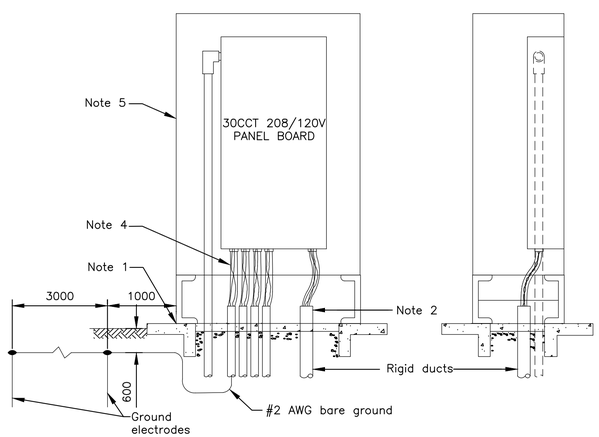

NOTES:

A. All dimensions are in millimeters unless otherwise shown.

1. Cabinet to be sealed around bottom perimeter with neoprene gasket.
2. Seal all conduit openings.
3. Panelboard is required where indicated in quantity sheets.
4. All cables within cabinet shall be installed in non metallic liquidtight ducts and connectors.
5. Power supply cabinet to be secured to pedestal with four 16mm dia. x 25mm long stainless steel machine bolts, flat washers & lockwashers.

MINISTRY OF TRANSPORTATION ONTARIO DRAWING	Date	Sep. 2010	Rev	2
ADVANCED TRAFFIC MANAGEMENT SYSTEM POWER SUPPLY CABINET 208/120V 30CB PANEL	_ MODIFIED BY: WSP CANADA _ FEB. 2024			
	MTOD – 2940.310M			

NOT TO SCALE

IT IS A VIOLATION OF THE LAW FOR ANY PERSON, UNLESS ACTING UNDER THE DIRECT SUPERVISION OF A LICENSED ARCHITECT OR ENGINEER, TO ALTER AN ITEM IN ANY WAY. IF AN ITEM BEARING THE SEAL AND THE NOTATION "ALTERED BY" FOLLOWED BY THEIR SIGNATURE AND THE DATE OF SUCH ALTERATION AND A SPECIFIC DESCRIPTION OF THE ALTERATION.

MARK	DESCRIPTION	DATE	APPR
A	ISSUED FOR BID (NOT FOR CONST)	08/21/2024	

DISCLAIMER

DESIGNED BY: MIKE J. WILDE
DWN BY: N.F.G
CKD BY: M.J.W.
SUBMITTED BY: WSP CANADA
FILE NAME: pw:\\wsp-cans.bentley.com:pw_wsp_ontario_transportation_projects\Documents\00635 - Buffalo and Fort Erie Public Bridge Authority - Toll Collection\00635-00-001.dwg
Bridge(1) (WP)v4.1.0.3, (TitleBlk)C10v1, (Plot)ANSI-D-Sh-Clr1
PLOTTED BY: N.F.G.
SIZE: 22" X 34"
DATE: 01/09/2024
SOLICITATION NO.:
CONTRACT NO.:
02/07/2024

BUFFALO AND FORT ERIE PUBLIC BRIDGE AUTHORITY

WSP, USA Inc.
40 Lake Center Drive
Suite 300
Williamsville, NY 14202
(716) 853-1220

BUFFALO AND FORT ERIE PUBLIC BRIDGE AUTHORITY
PROJECT# XXX PARE 3.0
COMMUNICATION DETAIL-I

CROSSING PATHS ★ BUILDING FUTURES
THE PEACE BRIDGE

DRAWING NUMBER
C10

C:\pw_work\wsp-ca18\dms09629\A20M-00635-00-001.dwg Wed, 07 Feb 2024 - 9:45am GeraldeN

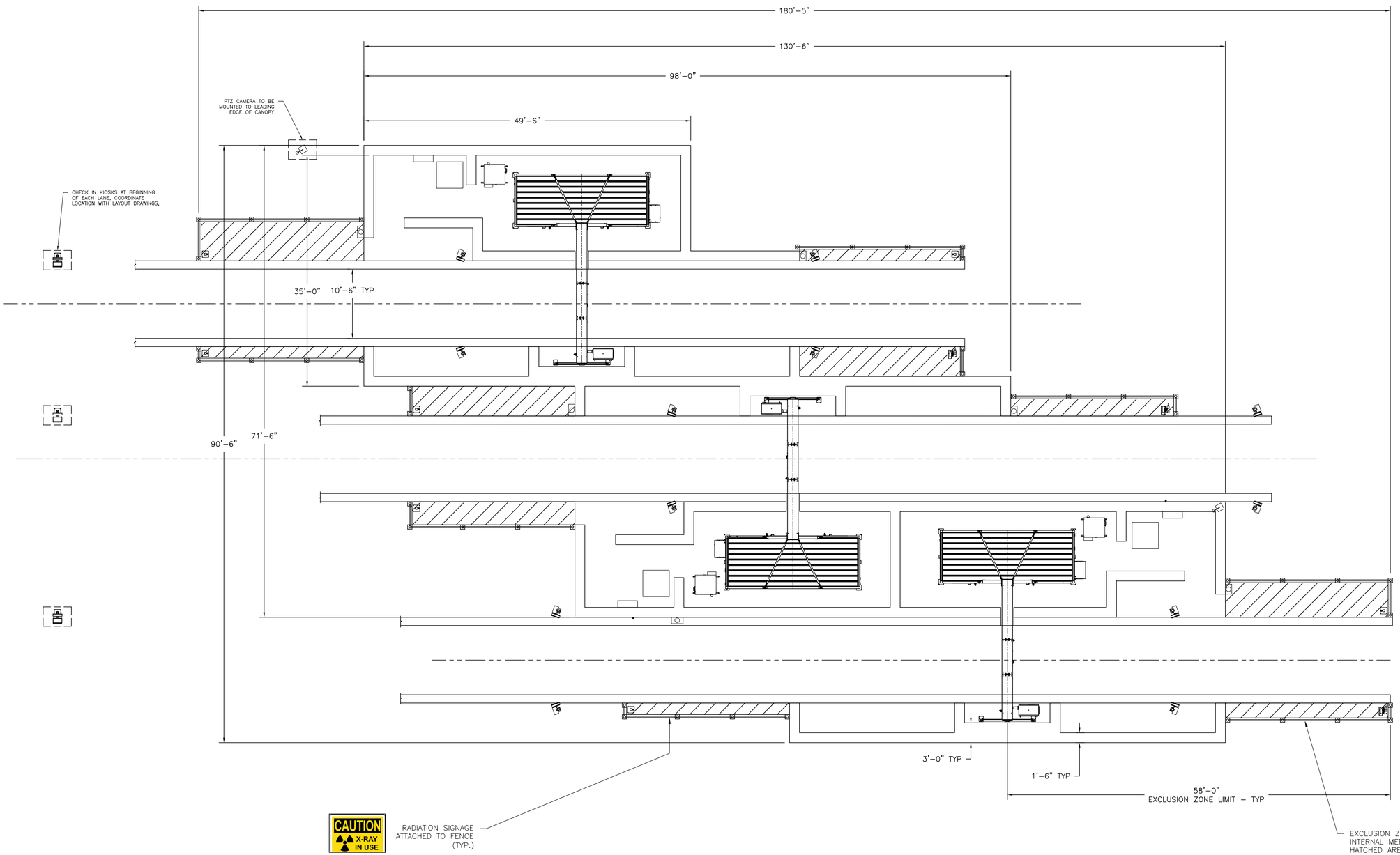

1 / - MEP SYSTEM OVERALL LAYOUT
SCALE: 1/8" = 1'-0"

0' 8' 16' 24'

ISSUED FOR BID

U.S. Customs and Border Protection

smiths detection
bringing technology to life

REV	DATE	DESCRIPTION	BY
0	02/08/2024	ISSUED FOR BID	JGC

GLOBAL GRAB TECHNOLOGIES

DRAWN BY: BPS
CHECKED BY:
SIZE: ANSI D
DATE: 2/24/2023
SCALE: AS NOTED
REV: 0
DRAWING NUMBER: 22-000PB-CL-001

This work contains CONFIDENTIAL and PROPRIETARY INFORMATION. This document may not be reproduced or disclosed without the express WRITTEN permission of GLOBAL GRAB TECHNOLOGIES, INC.

COPYRIGHT 2023
GLOBAL GRAB TECHNOLOGIES, INC.
ALL RIGHTS RESERVED

WARNING: THE EXPORT OR re-EXPORT OF THIS DRAWING IS SUBJECT TO CERTAIN FOREIGN REGULATIONS AND OTHER APPLICABLE GOVERNMENTAL RESTRICTIONS OR REGULATIONS

PEACE BRIDGE - CANADA

MEP SYSTEM OVERALL LAYOUT

SHEET ID
CL-001

SHEET:-

LEGEND

CONCRETE WALL FINISH SURFACES

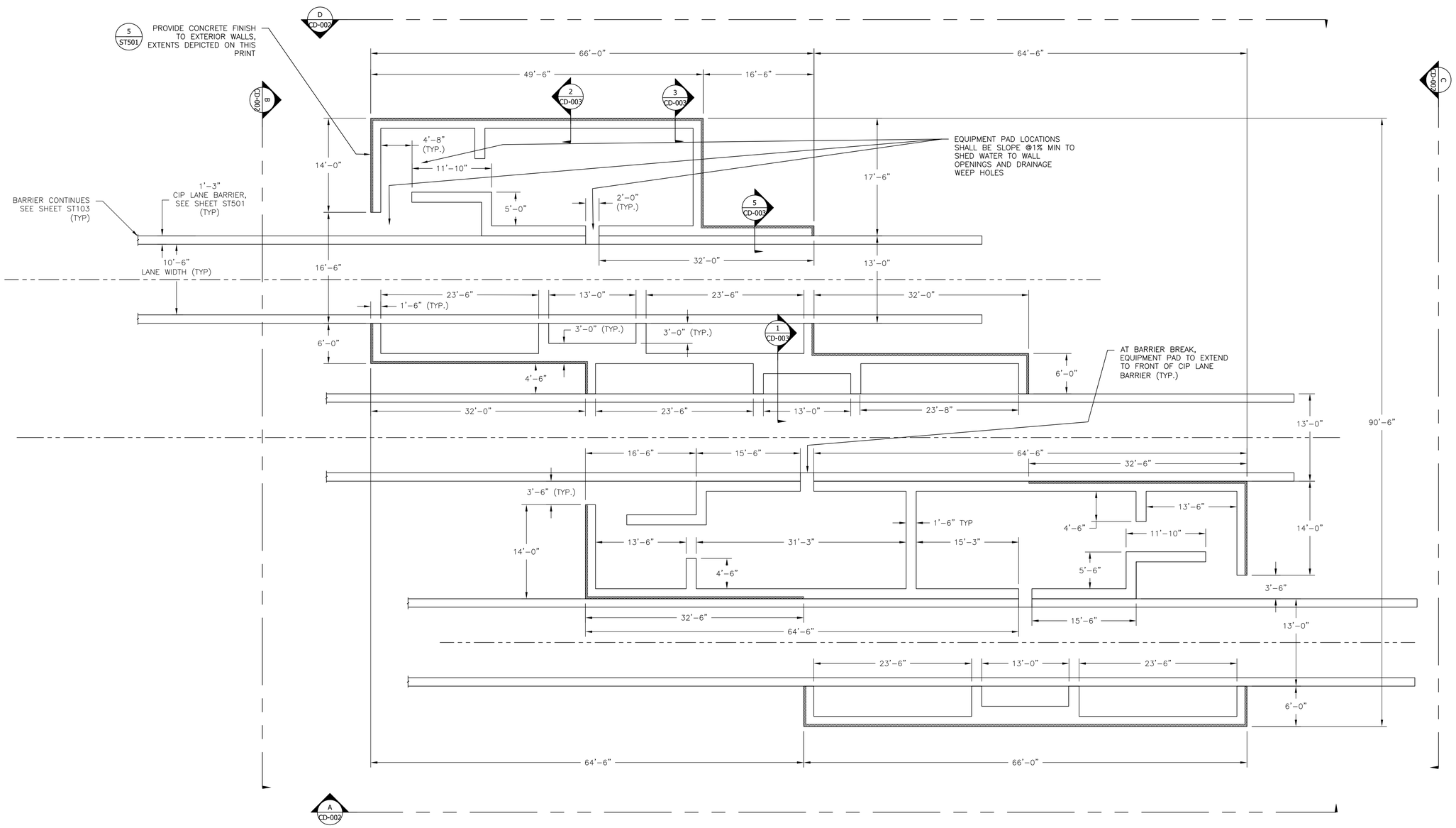

1 SHIELDING WALL LAYOUT
SCALE: 1/8" = 1'-0"

0' 8' 16' 24'

ISSUED FOR BID

U.S. Customs and Border Protection

smiths detection
bringing technology to life

REV	DATE	DESCRIPTION	BY
0	02/08/2024	ISSUED FOR BID	JGC

GLOBAL GRAB TECHNOLOGIES

DRAWN BY: SCG
CHECKED BY: JGC
SIZE: ANSI D
DATE: 06/29/2023
SCALE: AS NOTED
REV: 0
DRAWING NUMBER: 22-000PB-CD-001

This work contains CONFIDENTIAL, and PROPRIETARY INFORMATION. This document may not be reproduced in any form without the express WRITTEN permission, of GLOBAL GRAB TECHNOLOGIES, INC.
© COPYRIGHT 2023
GLOBAL GRAB TECHNOLOGIES, INC.
ALL RIGHTS RESERVED
WARNING: THE EXPORT OR RE-EXPORT OF THIS DRAWING IS SUBJECT TO EXPORT CONTROL REGULATIONS AND THUS APPLICABLE GOVERNMENTAL RESTRICTIONS OR REGULATIONS

PEACE BRIDGE – CANADA

MEP WALL LAYOUT

SHEET ID
CD-001

SHEET:–

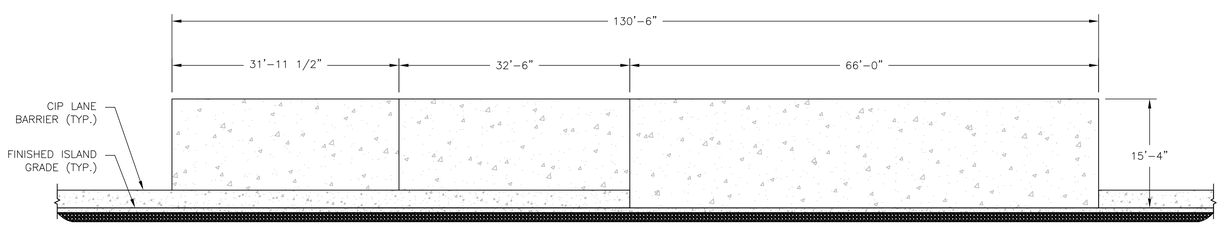

A
-
SHIELDING WALL ELEVATION VIEW
SCALE: 3/32"=1'-0"

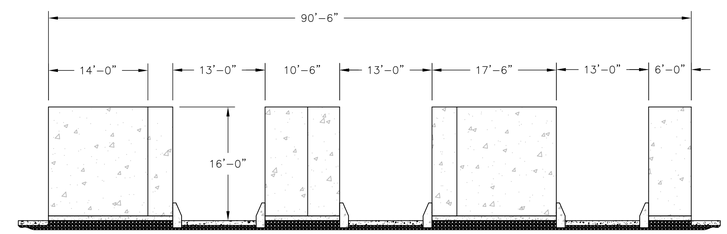

B
-
SHIELDING WALL ELEVATION VIEW
SCALE: 3/32"=1'-0"

0' 5' 10' 20' 30'

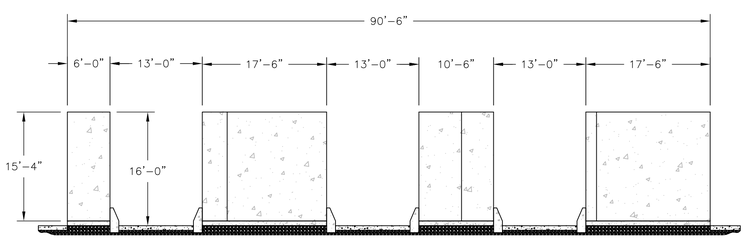

C
-
SHIEDING WALL ELEVATION VIEW
SCALE: 3/32"=1'-0"

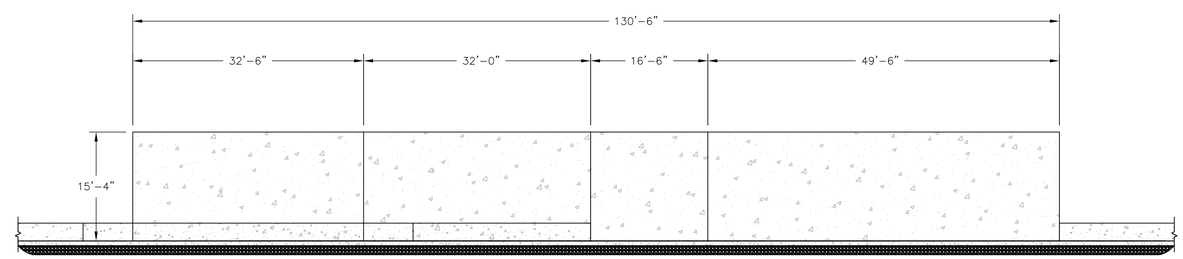

D
-
SHIELDING WALL ELEVATION VIEW
SCALE: 3/32"=1'-0"

ISSUED FOR BID

U.S. Customs and Border Protection

smiths detection
bringing technology to life

REV	DATE	DESCRIPTION	BY
0	02/02/2024	ISSUED FOR BID	jgc

GLOBAL GRAB TECHNOLOGIES

DRAWN BY: SCG
DATE: 06/19/2023
CHECKED BY: JGC
SCALE: AS NOTED
SIZE: ANSI D
REV: 0
DRAWING NUMBER: 22-000PB-CD-002

This work contains CONFIDENTIAL and PROPRIETARY INFORMATION. This document may not be reproduced, in whole or in part, without the express WRITTEN permission of GLOBAL GRAB TECHNOLOGIES, INC.
© COPYRIGHT 2019
GLOBAL GRAB TECHNOLOGIES, INC.
ALL RIGHTS RESERVED

WARNING: THE EXPORT OR RE-EXPORT OF THIS DRAWING IS SUBJECT TO EXPORT CONTROL REGULATIONS AND OTHER APPLICABLE GOVERNMENTAL RESTRICTIONS OR REGULATIONS

PEACE BRIDGE – CANADA

MEP WALLS ELEVATION

SHEET ID
CD-002

SHEET:–

NOTES

1	BOTTOM OF FOOTING ELEVATION TO BE 4'–0" MIN. BELOW F.G. ELEVATION FOR FROST PROTECTION.
2	ALL FOOTINGS SHALL BE PLACE AT A SINGLE ELEVATION.
3	PRELIMINARY FOOTING SIZES BASED ON THE ASSUMPTION OF SUITABLE INPLACE SOILS WITH A MINIMUM ALLOWABLE BEARING CAPACITY OF 3000 PSF.
4	IT IS THE CONTRACTORS RESPONSIBILITY TO VERIFY SOIL CONDITIONS WITH THE SITE GEOTECHNICAL REPORT AND COMPLY WITH THE RECOMMENDATIONS THAT ARE SET FORTH WITHIN.

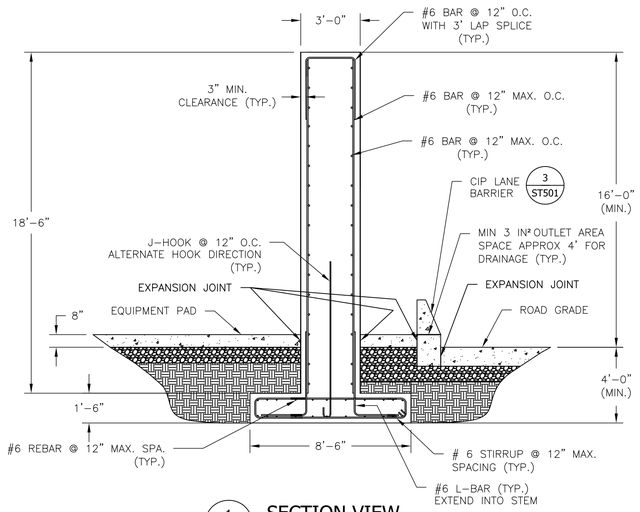

1 / - SECTION VIEW
SCALE: NTS

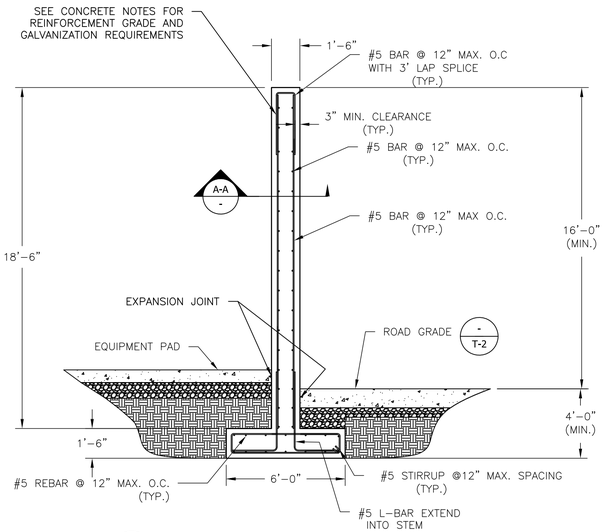

2 / - STRAIGHT WALL SECTION VIEW
SCALE: NTS

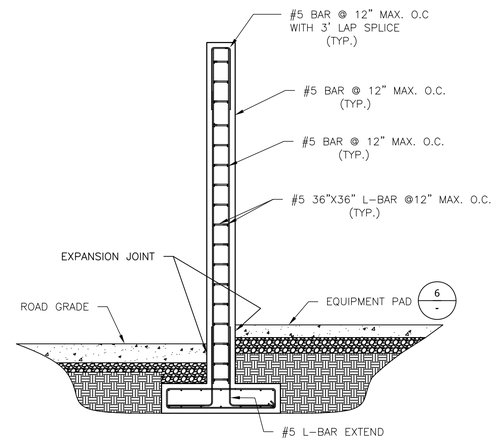

3 / - CORNER SECTION
SCALE: NTS

NOTE: REFERENCE LOCAL STATE/TERRITORY SPECIFICATIONS FOR FOR STANDING WALL EXPANSION JOINT DESIGN GUIDES. EXPANSION JOINT SHAPE SHALL BE AS DRAWN FOR RADIOLOGICAL PROTECTION.

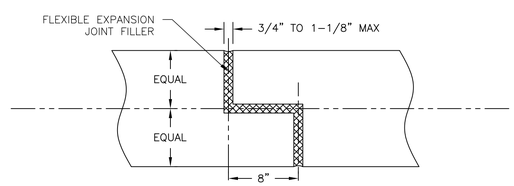

A-A / - EXPANSION JOINT SHAPE
SCALE: NTS

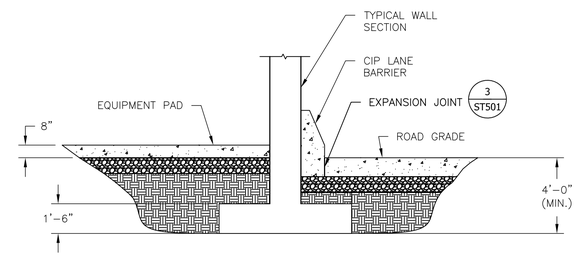

5 / - SECTION VIEW
SCALE: NTS

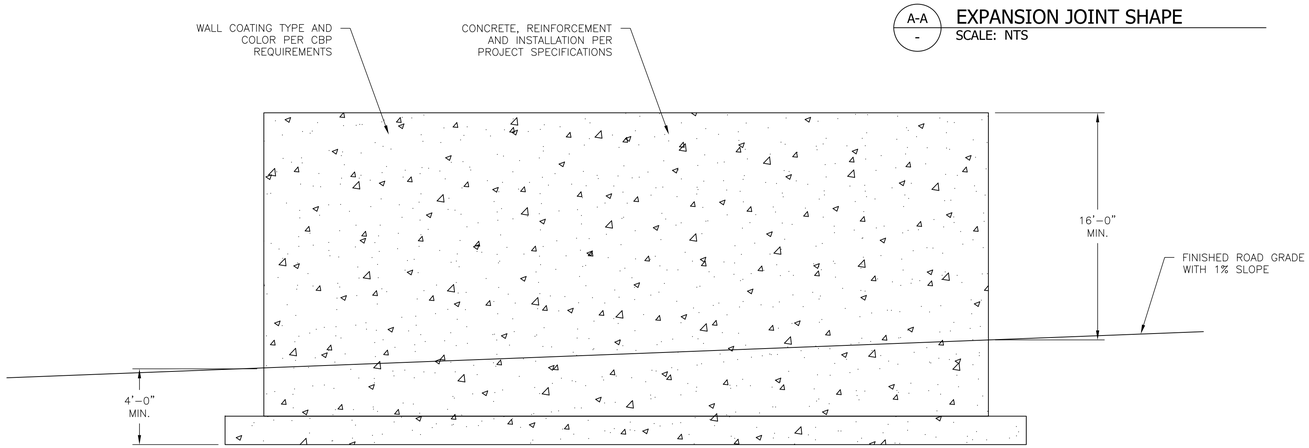

4 / - TYPICAL WALL SECTION VIEW
SCALE: NTS

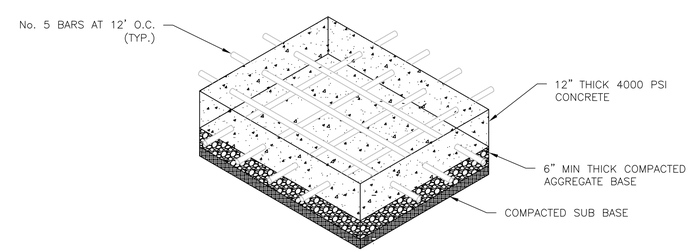

6 / - EQUIPMENT PAD
SCALE: NTS

ISSUED FOR BID

U.S. Customs and Border Protection

smiths detection
bringing technology to life

REV	DATE	DESCRIPTION	BY
0	02/08/2024	ISSUED FOR BID	JGC

GLOBAL GRAB TECHNOLOGIES

DRAWN BY: SCG
CHECKED BY: JGC
SIZE: ANSI D
DATE: 06/19/2023
SCALE: AS NOTED
REV: 0
DRAWING NUMBER: 22–000PB–CD–003

This work contains CONFIDENTIAL and PROPRIETARY INFORMATION. This document may not be reproduced, in whole or in part, without the express WRITTEN permission of GLOBAL GRAB TECHNOLOGIES, INC.
GLOBAL GRAB TECHNOLOGIES, INC. COPYRIGHT 2023
ALL RIGHTS RESERVED
WARNING: Per EXPORT CONTROL of this document, it is STRICTLY PROHIBITED to violate applicable GOVERNMENTAL RESTRICTIONS OR REGULATIONS

PEACE BRIDGE – CANADA
MEP WALL SECTIONS

SHEET ID
CD–003
SHEET:–

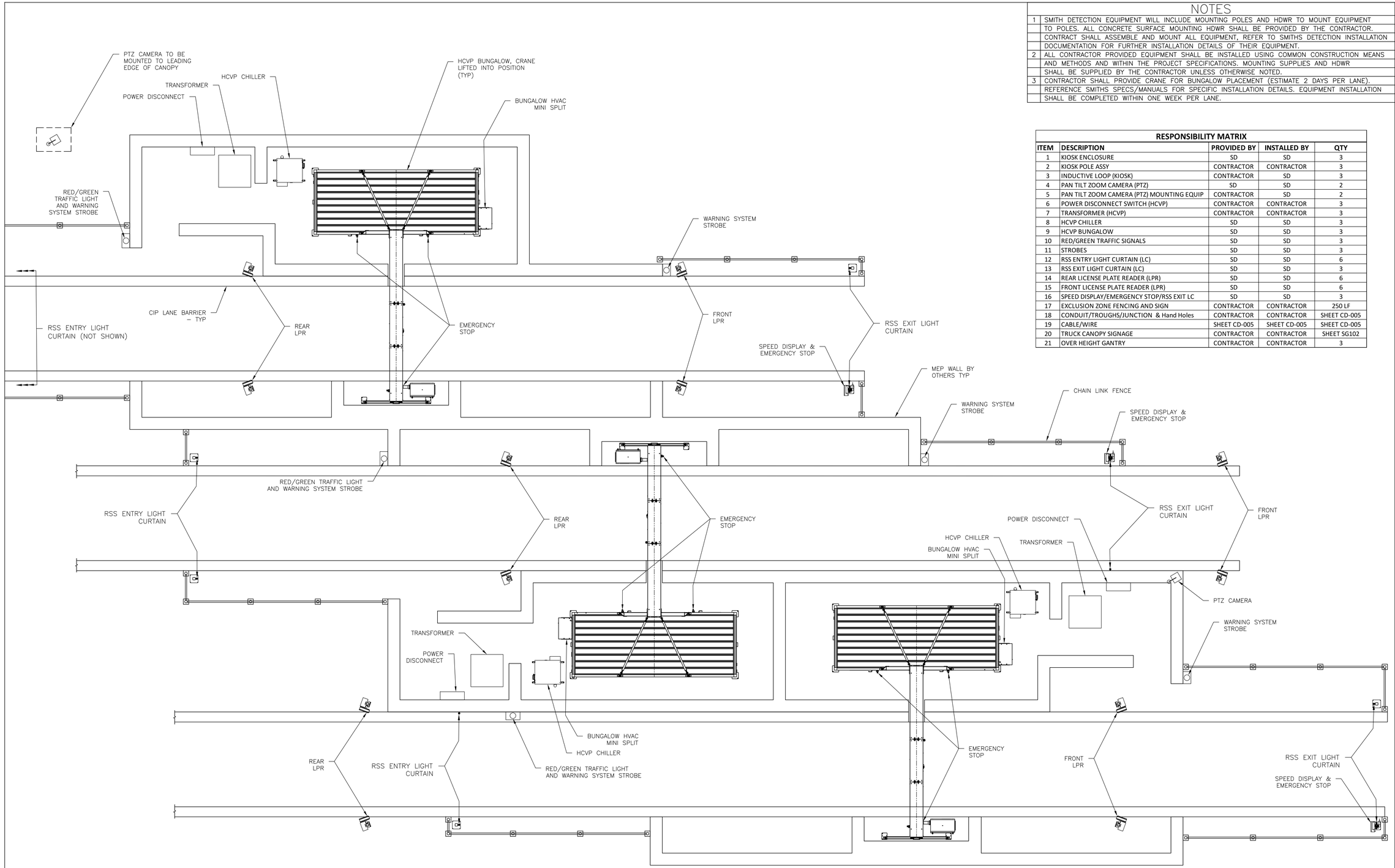

1 MEP PLAN VIEW
SCALE: NTS

NOTES

1. SMITH DETECTION EQUIPMENT WILL INCLUDE MOUNTING POLES AND HDWR TO MOUNT EQUIPMENT TO POLES. ALL CONCRETE SURFACE MOUNTING HDWR SHALL BE PROVIDED BY THE CONTRACTOR. CONTRACT SHALL ASSEMBLE AND MOUNT ALL EQUIPMENT, REFER TO SMITHS DETECTION INSTALLATION DOCUMENTATION FOR FURTHER INSTALLATION DETAILS OF THEIR EQUIPMENT.
2. ALL CONTRACTOR PROVIDED EQUIPMENT SHALL BE INSTALLED USING COMMON CONSTRUCTION MEANS AND METHODS AND WITHIN THE PROJECT SPECIFICATIONS. MOUNTING SUPPLIES AND HDWR SHALL BE SUPPLIED BY THE CONTRACTOR UNLESS OTHERWISE NOTED.
3. CONTRACTOR SHALL PROVIDE CRANE FOR BUNGALOW PLACEMENT (ESTIMATE 2 DAYS PER LANE). REFERENCE SMITHS SPECS/MANUALS FOR SPECIFIC INSTALLATION DETAILS. EQUIPMENT INSTALLATION SHALL BE COMPLETED WITHIN ONE WEEK PER LANE.

RESPONSIBILITY MATRIX

ITEM	DESCRIPTION	PROVIDED BY	INSTALLED BY	QTY
1	KIOSK ENCLOSURE	SD	SD	3
2	KIOSK POLE ASSY	CONTRACTOR	CONTRACTOR	3
3	INDUCTIVE LOOP (KIOSK)	CONTRACTOR	SD	3
4	PAN TILT ZOOM CAMERA (PTZ)	SD	SD	2
5	PAN TILT ZOOM CAMERA (PTZ) MOUNTING EQUIP	CONTRACTOR	SD	2
6	POWER DISCONNECT SWITCH (HCVP)	CONTRACTOR	CONTRACTOR	3
7	TRANSFORMER (HCVP)	CONTRACTOR	CONTRACTOR	3
8	HCVP CHILLER	SD	SD	3
9	HCVP BUNGALOW	SD	SD	3
10	RED/GREEN TRAFFIC SIGNALS	SD	SD	3
11	STROBES	SD	SD	3
12	RSS ENTRY LIGHT CURTAIN (LC)	SD	SD	6
13	RSS EXIT LIGHT CURTAIN (LC)	SD	SD	3
14	REAR LICENSE PLATE READER (LPR)	SD	SD	6
15	FRONT LICENSE PLATE READER (LPR)	SD	SD	6
16	SPEED DISPLAY/EMERGENCY STOP/RSS EXIT LC	SD	SD	3
17	EXCLUSION ZONE FENCING AND SIGN	CONTRACTOR	CONTRACTOR	250 LF
18	CONDUIT/TROUGHS/JUNCTION & Hand Holes	CONTRACTOR	CONTRACTOR	SHEET CD-005
19	CABLE/WIRE	SHEET CD-005	SHEET CD-005	SHEET CD-005
20	TRUCK CANOPY SIGNAGE	CONTRACTOR	CONTRACTOR	SHEET SG102
21	OVER HEIGHT GANTRY	CONTRACTOR	CONTRACTOR	3

ISSUED FOR BID

U.S. Customs and Border Protection

smiths detection
bringing technology to life

REV	DATE	DESCRIPTION	BY
1	03/20/2024	UPDATED MATRIX	JGC
0	02/08/2024	ISSUED FOR BID	JGC

GLOBAL GRAB TECHNOLOGIES

DRAWN BY: JGC
CHECKED BY:
SIZE: ANSI D
DATE: 09/14/2023
SCALE: AS NOTED
REV: 1
DRAWING NUMBER: 22-000PB-CD-004

This work contains CONFIDENTIAL and PROPRIETARY INFORMATION. This document may not be reproduced, in whole or in part, without the express WRITTEN permission of GLOBAL GRAB TECHNOLOGIES, INC.
COPYRIGHT 2023
GLOBAL GRAB TECHNOLOGIES, INC.
ALL Rights RESERVED

WARNING: THE EXPORT OR re-EXPORT OF THIS DRAWING IS STRICTLY PROHIBITED UNDER REGULATIONS AND OTHER APPLICABLE GOVERNMENTAL RESTRICTIONS OR REGULATIONS

PEACE BRIDGE – CANADA

MEP PLAN VIEW

SHEET ID
CD-004

SHEET:–

CONDUIT TABLE

CONDUIT LABEL	FROM	TO	CONDUIT TYPE	D/B VS. ENC	CONDUCTOR
A	RSS ENTRY	BUNGALOW COMMS	2" SCH 40 PVC	ENCASED	SMITHS FACTORY CABLE
B	RSS ENTRY	BUNGALOW COMMS	2" SCH 40 PVC	ENCASED	SMITHS FACTORY CABLE
C	LIGHT/STROBE	BUNGALOW COMMS	2" SCH 40 PVC	ENCASED	SMITHS FACTORY CABLE
D	LPR (REAR 1)	BUNGALOW COMMS	2" SCH 40 PVC	ENCASED	SMITHS FACTORY CABLE
E	LPR (REAR 2)	BUNGALOW COMMS	2" SCH 40 PVC	ENCASED	SMITHS FACTORY CABLE
F	LPR (FRONT 1)	BUNGALOW COMMS	2" SCH 40 PVC	ENCASED	SMITHS FACTORY CABLE
G	LPR (FRONT 2)	BUNGALOW COMMS	2" SCH 40 PVC	ENCASED	SMITHS FACTORY CABLE
H	STROBE	BUNGALOW COMMS	2" SCH 40 PVC	ENCASED	SMITHS FACTORY CABLE
J	RSS EXIT	BUNGALOW COMMS	2" SCH 40 PVC	ENCASED	SMITHS FACTORY CABLE
K	RSS EXIT	BUNGALOW COMMS	2" SCH 40 PVC	ENCASED	SMITHS FACTORY CABLE
L	ENTRY SCENE CAMERA	BUNGALOW COMM	1" SCH 40 PVC	ENCASED	CAT 6A DIRECT BURIAL RATED CABLE
M	ENTRY SCENE CAMERA	BUNGALOW POWER	1" SCH 40 PVC	ENCASED	(2) 12 GAUGE + 12 GAUGE GROUND THHN
N	EXIT SCENE CAMERA	BUNGALOW COMM	1" SCH 40 PVC	ENCASED	CAT 6A DIRECT BURIAL RATED CABLE
P	EXIT SCENE CAMERA	BUNGALOW POWER	1" SCH 40 PVC	ENCASED	(2) 12 GAUGE + 12 GAUGE GROUND THHN
Q	MEP POWER DISCONNECT	MDP OUTBUILDING, SEE SITE LAYOUT FOR LOCATION	2X 2" SCH 80 PVC	DIRECTIONAL BORED	2X (3) 2/0 (VERIFY 750' PATHWAY LENGTH FOR VOLTAGE DROP)
R	MEP POWER DISCONNECT	TRANSFORMER	2X 2" SCH 40 PVC	ENCASED	2X (3) 2/0
S	HCVP CHILLER	BUNGALOW POWER	2" WIP	WIP	SMITHS FACTORY
T	CHECK IN KIOSK	BUNGALOW POWER	1" SCH 40 PVC	ENCASED	(2) 12 GAUGE + 12 GAUGE GROUND THHN
U	CHECK IN KIOSK	BUNGALOW COMM	1" SCH 40 PVC	ENCASED	(3) CAT 6A DIRECT BURIAL RATED CABLE
W	CHECK IN KIOSK LOOP	STUB AT CURB	1" SCH 40 PVC	ENCASED	INDUCTIVE LOOP WIRE

NOTES

1. ALL CONDUIT, JUNCTION BOXES, AND HAND HOLES SHALL BE PROVIDED AND INSTALLED BY THE CONTRACTOR. CONDUIT PATHWAYS SHALL BE DETERMINED IN THE FIELD AND SHALL BE RUN IN A A MANNER SUCH THAT MINIMIZES THE TOTAL LF FOR CABLE RUNS.
2. SEE SHEET CD-006 FOR CONDUIT STUB-UP DIMENSIONAL LOCATES.
3. ALL CABLE/WIRE SHALL BE PULLED BY THE CONTRACTOR. SMITHS FACTORY CABLE SUPPLIED BY SMITHS DETECTION ALL OTHER CABLE/WIRE PROVIDED BY THE CONTRACTOR.
4. THE CONTRACTOR SHALL ASSIST SMITHS DETECTION WITH ALL FINAL TERMINATIONS. CONTRACTOR SHALL LEAVE 3' MINIMUM OF WIRE AT TERMINATION LOCATIONS FOR TERMINATIONS.
5. INDUCTIVE LOOP WIRE PROVIDED AND INSTALLED BY CONTRACTOR.

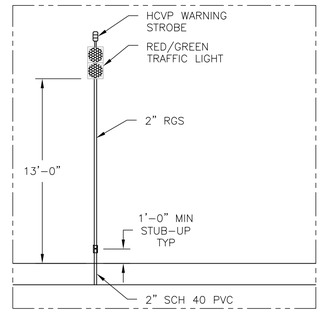

D-1 - LIGHT/STROBE DETAIL VIEW
SCALE: NTS

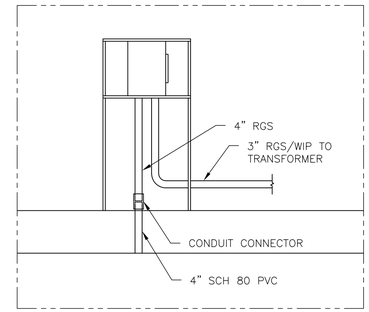

D-2 - DISCONNECT RACK
SCALE: NTS

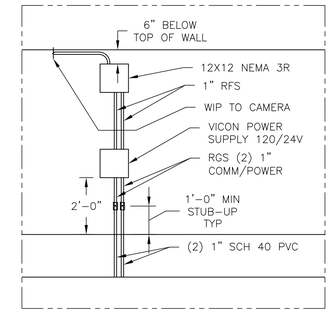

D-3 - CAMERA DETAIL VIEW
SCALE: NTS

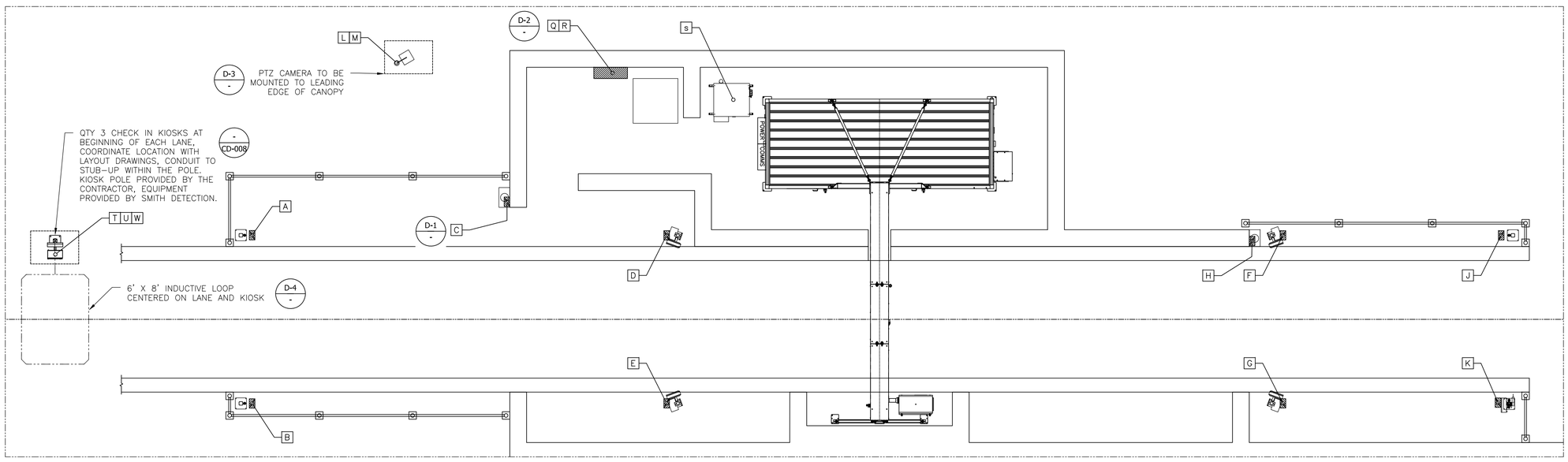

1 - CONDUIT AND CONDUCTOR DETAILS
SCALE: NTS

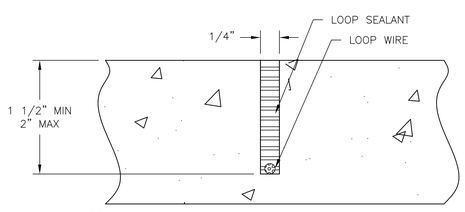

D-4 - INDUCTIVE LOOP SAW CUT SECTION
SCALE: NTS

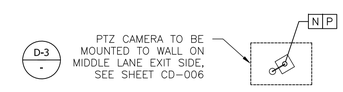

ISSUED FOR BID

U.S. Customs and Border Protection

smiths detection
bringing technology to life

REV	DATE	DESCRIPTION	BY
0	02/08/2024	ISSUED FOR BID	JGC

GLOBAL GRAB TECHNOLOGIES

DRAWN BY: JGC
CHECKED BY: -
SIZE: ANSI D
DATE: 10/16/2023
SCALE: AS NOTED
REV: 0
DRAWING NUMBER: 22-000PB-CD-005

This work contains CONFIDENTIAL and PROPRIETARY INFORMATION. The document may not be reproduced, in any form, without the express WRITTEN permission of GLOBAL GRAB TECHNOLOGIES, INC.
© 2023 GLOBAL GRAB TECHNOLOGIES, INC.
GLOBAL GRAB TECHNOLOGIES, INC.
ALL RIGHTS RESERVED
WARNING: THE COPYRIGHT OR REUSE OF THIS DOCUMENT MAY BE RESTRICTED BY COPYRIGHT LAWS, REGULATIONS AND OTHER APPLICABLE CONTRACTUAL RESTRICTIONS OR REGULATIONS

PEACE BRIDGE - CANADA
CONDUIT AND CONDUCTOR DETAILS

SHEET ID
CD-005
SHEET:-

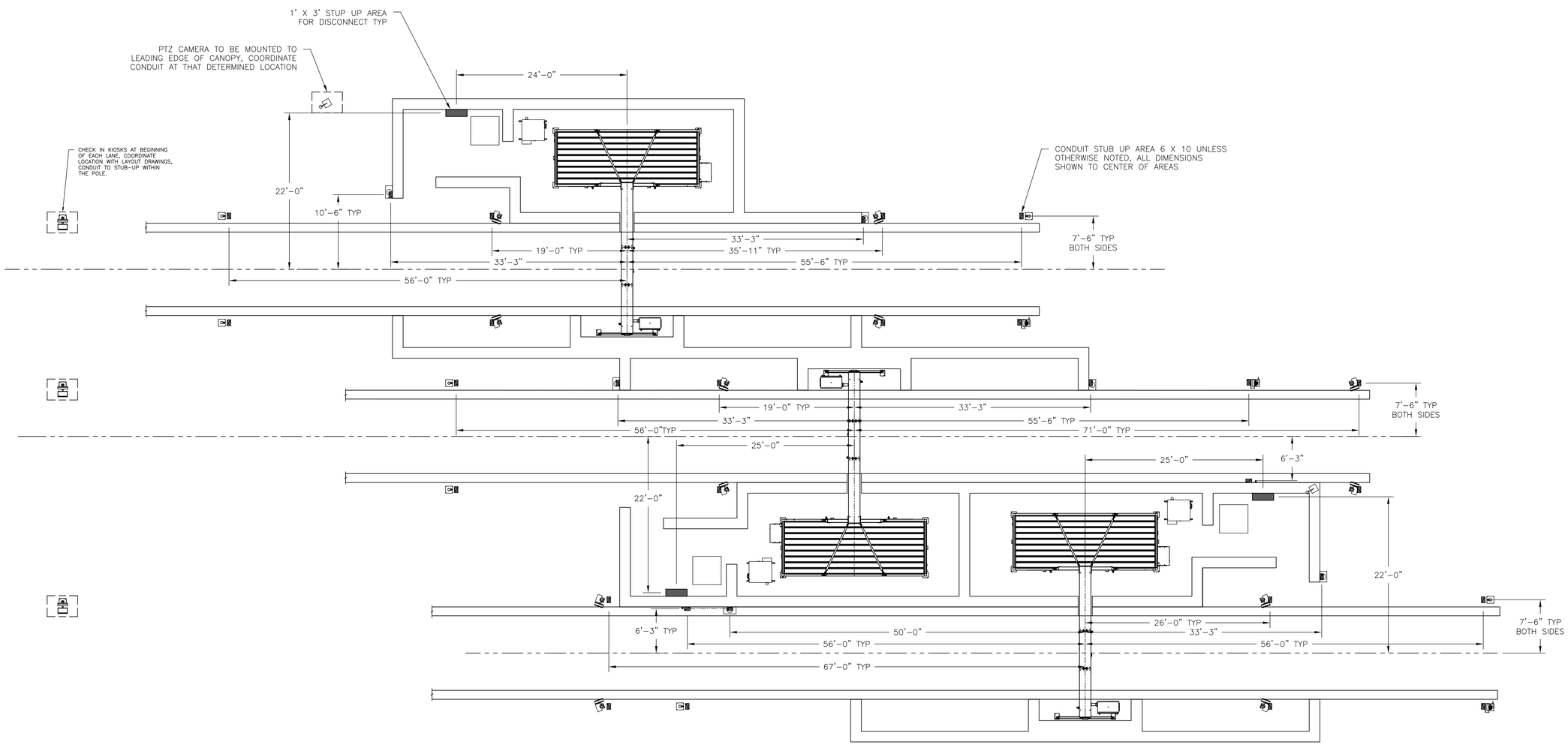

1 - CONDUIT STUB-UP DIMENSIONAL PLAN

SCALE: 1/8" = 1'-0"

0' 8' 16' 24'

ISSUED FOR BID

U.S. Customs and Border Protection

smiths detection bringing technology to life

REV	DATE	DESCRIPTION	BY
0	02/08/2024	ISSUED FOR BID	JGC

GLOBAL GRAB TECHNOLOGIES

DRAWN BY: JGC
DATE: 10/20/2023
CHECKED BY: _
SCALE: AS NOTED
SIZE: ANSI D
REV: 0
DRAWING NUMBER: 22-000PB-CD-006

This work contains CONFIDENTIAL and PROPRIETARY INFORMATION. This document may not be reproduced in any form without the express WRITTEN permission of GLOBAL GRAB TECHNOLOGIES, INC.

© COPYRIGHT 2023 GLOBAL GRAB TECHNOLOGIES, INC. ALL RIGHTS RESERVED

WARNING: THE EXPORT OR RE-EXPORT OF THIS DRAWING IS SUBJECT TO EXPORT CONTROL REGULATIONS AND THIS APPLICABLE GOVERNMENTAL RESTRICTIONS OR REGULATIONS

PEACE BRIDGE - CANADA

CONDUIT STUB-UP DIMENSIONAL PLAN

SHEET ID

CD-006

SHEET:-

NOTES

1	WIRE TIES, RAILS, POSTS, AND BRACES SHALL BE CONSTRUCTED ON THE SECURE SIDE OF THE FENCE ALIGNMENT.
2	CHAIN–LINK FABRIC SHALL BE PLACED ON THE OPPOSITE SIDE OF THE SECURE AREA.
3	DETAILS SHOWN ARE TO CLARIFY REQUIREMENTS AND ARE NOT INTENDED TO LIMIT OTHER TYPES OF FENCE SECTIONS AND METHODS OF INSTALLATION THAT COMPLY WITH THE PROJECT SPECIFICATIONS.
4	FENCE FABRIC SHALL CONFORM TO ASTM A392, CLASS 2, ZINC COATED STEEL WIRE WITH MINIMUM COATING WEIGHT OF 1.2 OUNCES OF ZINC PER SQUARE FOOT OF COATED SURFACE.
5	ALL POSTS SHALL BE ASTM F1043, TYPE 1C STEEL PIPE (SS40) WITH 50,000 PSI MINIMUM YIELD STRENGTH.
6	ALL POSTS AND FERROUS ACCESSORIES SHALL BE ZINC COATED.
7	FASTEN FABRIC TO LINE, END, AND CORNER POSTS AT APPROXIMATELY 15 INCH INTERVALS AND FASTEN TO ALL RAILS AND TENSION WIRES AT APPROXIMATELY 12 INCH INTERVALS.
8	FENCE SHALL BE TENSIONED PER ASTM STANDARDS FOR SECURITY CHAIN LINK FENCING AND/OR PER PROJECT SPECIFICATIONS.

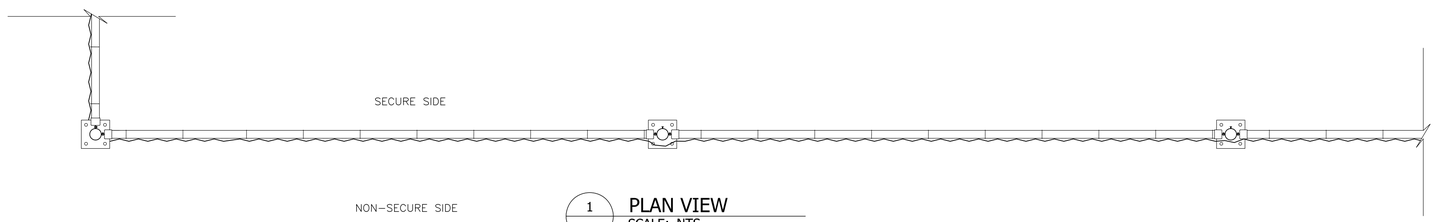

1 / - PLAN VIEW
SCALE: NTS

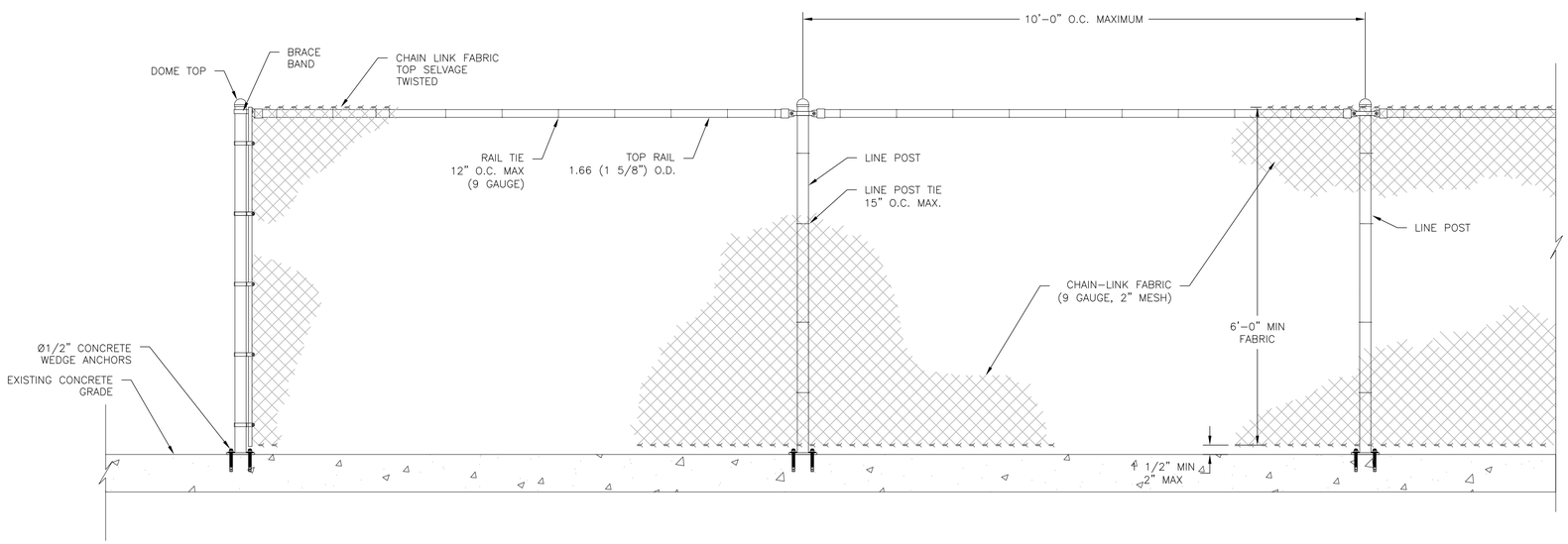

2 / - ELEVATION VIEW
SCALE: NTS

ISSUED FOR BID

U.S. Customs and Border Protection

smiths detection
bringing technology to life

REV	DATE	DESCRIPTION	BY
0	02/08/2024	ISSUED FOR BID	JGC

GLOBAL GRAB TECHNOLOGIES

DRAWN BY: JGC
CHECKED BY: _
SIZE: ANSI D
DATE: 11/02/2023
SCALE: AS NOTED
REV: 0
DRAWING NUMBER: 22–000PB–CD–007

This work contains CONFIDENTIAL and PROPRIETARY INFORMATION. This document may not be reproduced in any form without the express WRITTEN permission of GLOBAL GRAB TECHNOLOGIES, INC.
© COPYRIGHT 2023
GLOBAL GRAB TECHNOLOGIES, INC.
ALL RIGHTS RESERVED
WARNING: THE EXPORT OR RE-EXPORT OF THIS DRAWING IS STRICTLY PROHIBITED. EXPORTING REGULATIONS AND CITES, APPLICABLE GOVERNMENTAL RESTRICTIONS OR REGULATIONS

PEACE BRIDGE – CANADA
CHAIN LINK FENCE DETAILS

SHEET ID
CD–007
SHEET:–

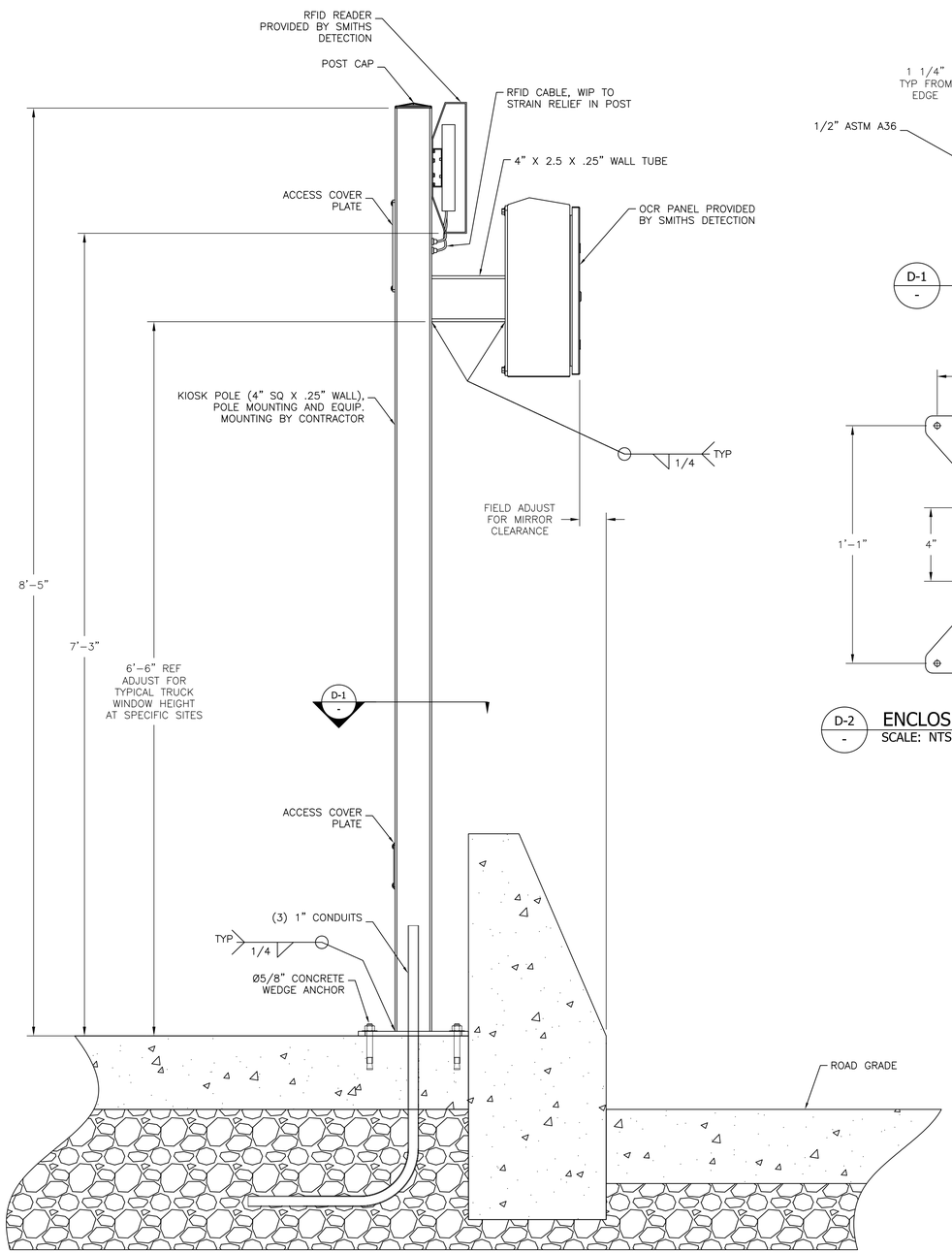

1 - ELEVATION FRONT VIEW
SCALE: NTS

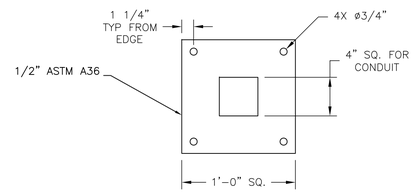

D-1 - BASEPLATE DETAIL VIEW
SCALE: NTS

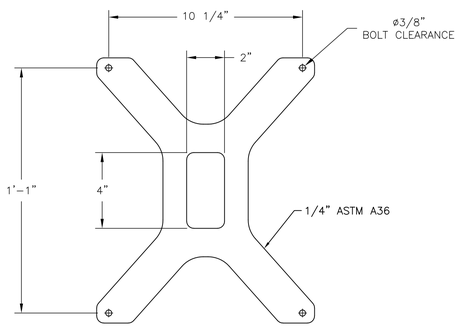

D-2 - ENCLOSURE MOUNTING PLATE DETAIL VIEW
SCALE: NTS

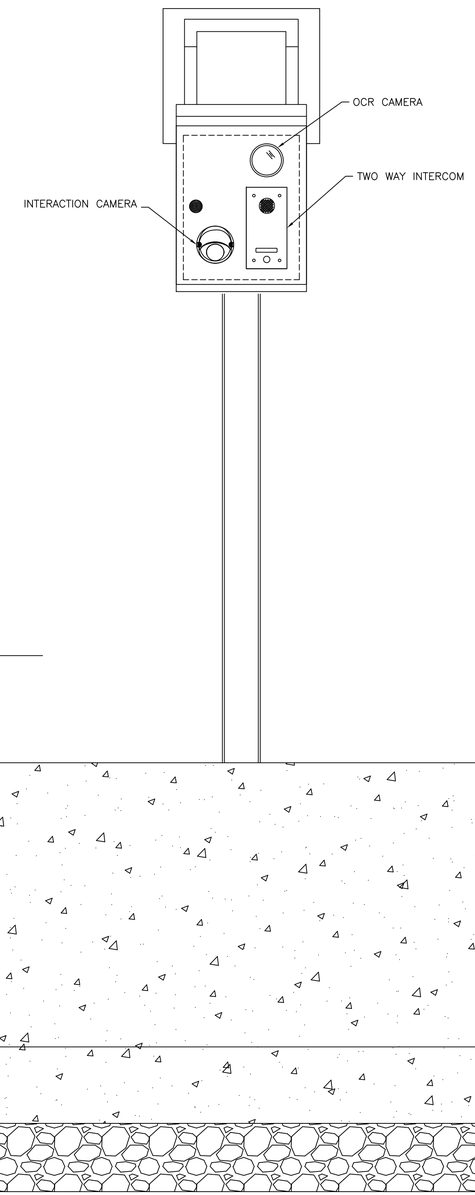

2 - ELEVATION SIDE VIEW
SCALE: NTS

ISSUED FOR BID

U.S. Customs and Border Protection

smiths detection
bringing technology to life

REV	DATE	DESCRIPTION	BY
0	02/08/2024	ORIGINAL RELEASE	LJB

GLOBAL GRAB TECHNOLOGIES

DRAWN BY: LJB
DATE: 12/14/2023
CHECKED BY: JGC
SCALE:
SIZE: ANSI D
REV: 0
DRAWING NUMBER: 22-000PB-CD-008

This work contains CONFIDENTIAL and PROPRIETARY INFORMATION. This document may not be reproduced in any form without the express WRITTEN permission of GLOBAL GRAB TECHNOLOGIES, INC.
COPYRIGHT © 2023
GLOBAL GRAB TECHNOLOGIES, INC.
ALL RIGHTS RESERVED
WARNING: THE COPYRIGHT OR REPRODUCTION OF THIS DOCUMENT MAY BE RESTRICTED BY CONTRACT, LICENSE, SALE OR OTHER AGREEMENT, PATENT, REGULATIONS AND OTHER APPLICABLE COPYRIGHT, RESTRICTIONS OR REGULATIONS

PEACE BRIDGE - CANADA
CHECK IN KIOSK
INSTALLATION DETAIL

SHEET ID
CD-008
SHEET:-

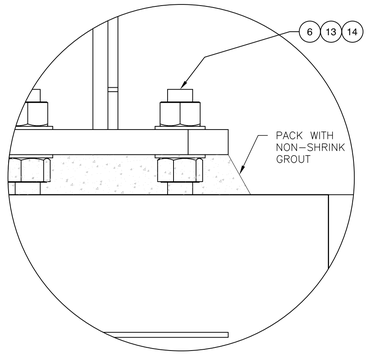

D-1 - DETAIL VIEW
SCALE: NTS

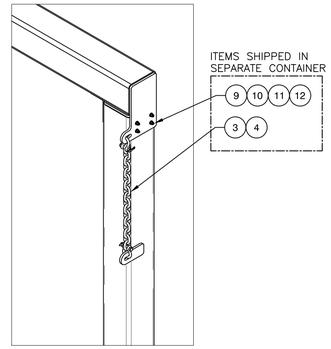

D-2 - DETAIL VIEW
SCALE: NTS

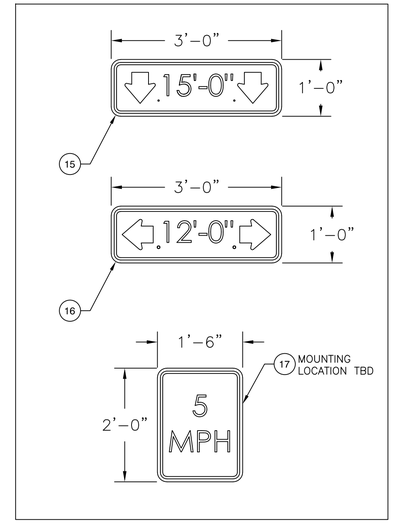

D-4 - SIGN DETAIL
SCALE: NTS

BILL OF MATERIAL

PART#	ITEM	QTY	DESCRIPTION
-	1	2	MEP OVERHEIGHT GANTY VERTICAL WELDMENT
-	2	2	MEP OVERHEIGHT GANTY HORIZONTAL WELDMENT
-	3	4	SHACKLE
-	4	2	SAFETY CHAIN
501257	5	2	MEP OVERHEIGHT GANTRY ANCHOR BOLT TEMPLATE
615490	6	4	1.25"DIA X 60" X 6" J ANCHOR BOLTS
-	7	12	#4 REBAR X 2'-0" DIA. - ASTM A615 GRADE 60 DEFORMED BAR
-	8	16	#8 REBAR X 5'-0" ~ ASTM A615 GRADE 60 DEFORMED BAR
615486	9	1	3/8"-16 X 3'-0" LG, ALL THREAD, HOT DIP GALV, CUT TO LG, IN FIELD
615487	10	8	WASHER, FLAT - SAE, 3/8, GR08, HOT DIP GALV
615058	11	8	WASHER, SPLIT LOCK, 3/8, GR08, HOT DIP GALV
615488	12	8	NUT, HEX, 3/8-16, GR08, HOT DIP GALV
-	13	24	NUT, HEX, 1 1/4-7, GR08, HOT DIP GALV
-	14	24	WASHER, FLAT - SAE, 1-1/4, GR08, HOT DIP GALV
-	15	1	CUSTOM WARNING SIGN "HEIGHT" 36" X 12"
-	16	1	CUSTOM WARNING SIGN "WIDTH" 36" X 12"
-	17	1	CUSTOM SPEED SIGN "5 MPH"
615145	18	4	TAPCO POLE MOUNT SIGN BRACKET

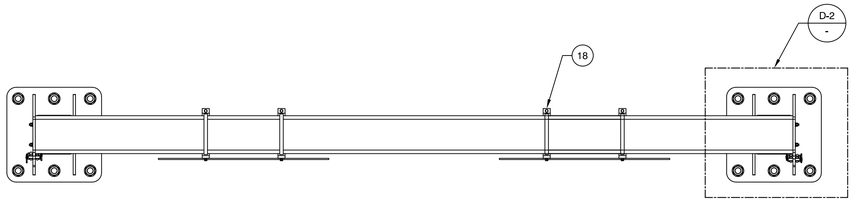

A-A - SECTION VIEW
SCALE: NTS

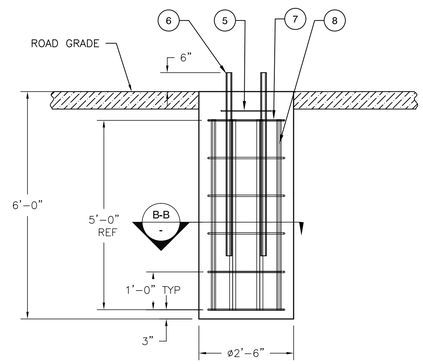

D-3 - FOUNDATION DETAIL
SCALE: NTS

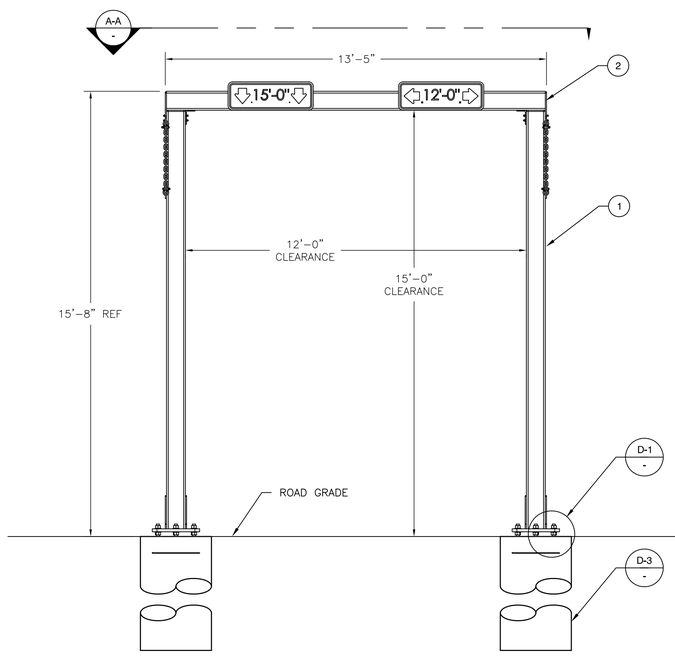

1 - ELEVATION VIEW
SCALE: NTS

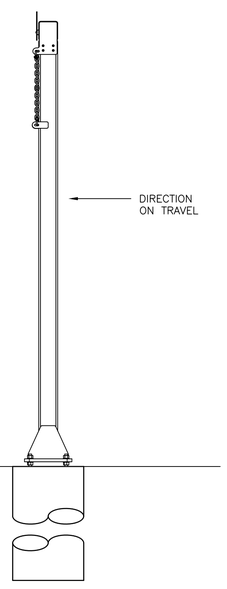

2 - SIDE ELEVATION VIEW
SCALE: NTS

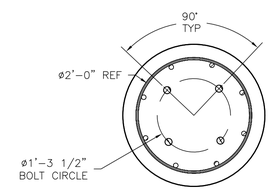

B-B - CROSS SECTION
SCALE: NTS

ISSUED FOR BID

U.S. Customs and Border Protection

smiths detection
bringing technology to life

REV	DATE	DESCRIPTION	BY
0	02/08/2024	ISSUED FOR BID	JGC

GLOBAL GRAB TECHNOLOGIES

DRAWN BY: JGC
DATE: 05/31/2023
CHECKED BY: _
SCALE: AS NOTED
SIZE: ANSI D
REV: 0
DRAWING NUMBER: 23–000PB–CD–011

This work contains CONFIDENTIAL and PROPRIETARY INFORMATION. The document may not be reproduced in any form without the express WRITTEN permission of GLOBAL GRAB TECHNOLOGIES, INC.
COPYRIGHT 2019
GLOBAL GRAB TECHNOLOGIES, INC.
ALL RIGHTS RESERVED

WARNING: RE-SORT OR RE-SHIP OF THIS DRAWING MAY VIOLATE EXPORT CONTROL REGULATIONS AND OTHER APPLICABLE GOVERNMENTAL RESTRICTIONS OR REGULATIONS

PEACE BRIDGE – CANADA
OVER HEIGHT GANTRY
INSTALLATION DETAILS

SHEET ID
CD–011
SHEET:_

NOTES

1 FACTORY CABLE UNLESS STATED OTHERWISE.

KEY NOTES:

1. NEW 75KVA TRANSFORMER:
   - 1.1. GROUND WITH #4 AWG THHN CU [Table 250.66]
   - 1.2. BOND X0, CONDUIT GROUNDING BUSHING, AND TRANSFORMER ENCLOSURE TO TRANSFORMER GROUND BAR WITH #4 AWG (min.) THHN CU [Table 250.66] AND PROVIDE #4 (min.) AWG SUPPLY SIDE BONDING JUMPER [Table 250.102(C)(1)]
   - 1.3. TRANSFORMER BY BRIDGE CONTRACTOR
2. PROVIDE #4 AWG (min.) GROUNDING ELECTRODE CONDUCTOR TO GROUND ROD AND TO BUILDING GROUND BAR. [Table 250.66]

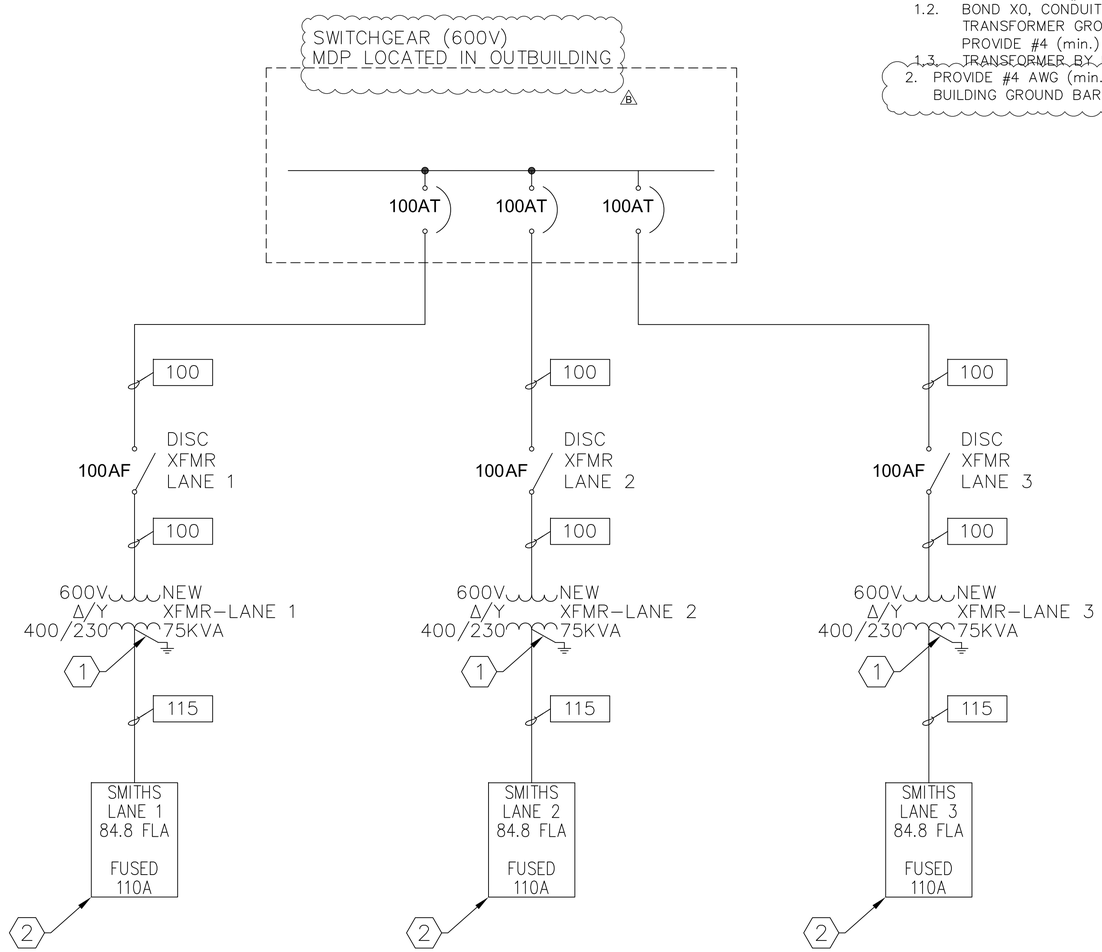

FEEDER SCHEDULE

FEEDER No.	FROM	TO	QTY of SETS	WIRES QTY	WIRES SIZE	WIRES EGC	CONDUIT MIN. SIZE	CONDUIT TYPE	OCP (AMPS)	VOLT DROP	REMARKS
100	SWBD-SCAN	DISC-XFMR-LANE 1	1	3	3	6	1-1/4	PVC	125	0.97%	NEW CU - UG
100	SWBD-SCAN	DISC-XFMR-LANE 2	1	3	3	6	1-1/4	PVC	125	0.97%	NEW CU - UG
100	SWBD-TBD	DISC-XFMR-LANE 3	1	3	3	6	1-1/4	PVC	125	0.97%	NEW CU - UG
100	DISC-XFMR-LANE 1	XFMR-LANE 1	1	3	3	6	1-1/4	PVC	125	0.09%	NEW CU - UG
100	DISC-XFMR-LANE 2	XFMR-LANE 2	1	3	3	6	1-1/4	PVC	125	0.09%	NEW CU - UG
100	DISC-XFMR-LANE 3	XFMR-LANE 3	1	3	3	6	1-1/4	PVC	125	0.09%	NEW CU - UG
115	XFMR-LANE 1	PNL-SMITH LANE 1	1	3	2	8	1-1/4	PVC	110	0.34%	NEW CU - UG
115	XFMR-LANE 2	PNL-SMITH LANE 2	1	3	2	8	1-1/4	PVC	110	0.34%	NEW CU - UG
115	XFMR-LANE 3	PNL-SMITH LANE 3	1	3	2	8	1-1/4	PVC	110	0.34%	NEW CU - UG

CONCEPTUAL DRAWING

U.S. Customs and Border Protection

smiths detection
bringing technology to life

REV	DATE	DESCRIPTION	BY
B	12/15/2023	UPDATED NOTES	AHT
A	06/14/2023	ORIGINAL RELEASE	AHT

GLOBAL GRAB TECHNOLOGIES

DRAWN BY: AHT
CHECKED BY: _
SIZE: ANSI D
DATE: 06/14/2023
SCALE: AS NOTED
REV: B
DRAWING NUMBER: 23-000GH-EI800.1

This work contains CONFIDENTIAL and PROPRIETARY INFORMATION. This document may not be reproduced in any form without the express WRITTEN permission of GLOBAL GRAB TECHNOLOGIES, INC.
GLOBAL GRAB TECHNOLOGIES, INC. © COPYRIGHT 2023
ALL RIGHTS RESERVED
WARNING: THE EXPORT OR RE-EXPORT OF THIS DRAWING IS STRICTLY PROHIBITED FOLLOWING REGULATIONS AND LAWS, APPLICABLE GOVERNMENTAL RESTRICTIONS OR REGULATIONS

PEACE BRIDGE – CANADA
SINGLE LINE DIAGRAM

SHEET ID
EI800.1
SHEET:–